INFINITE ENERGY™

Cold Fusion and New Energy Technology

Volume 5, Issue 29 • 2000

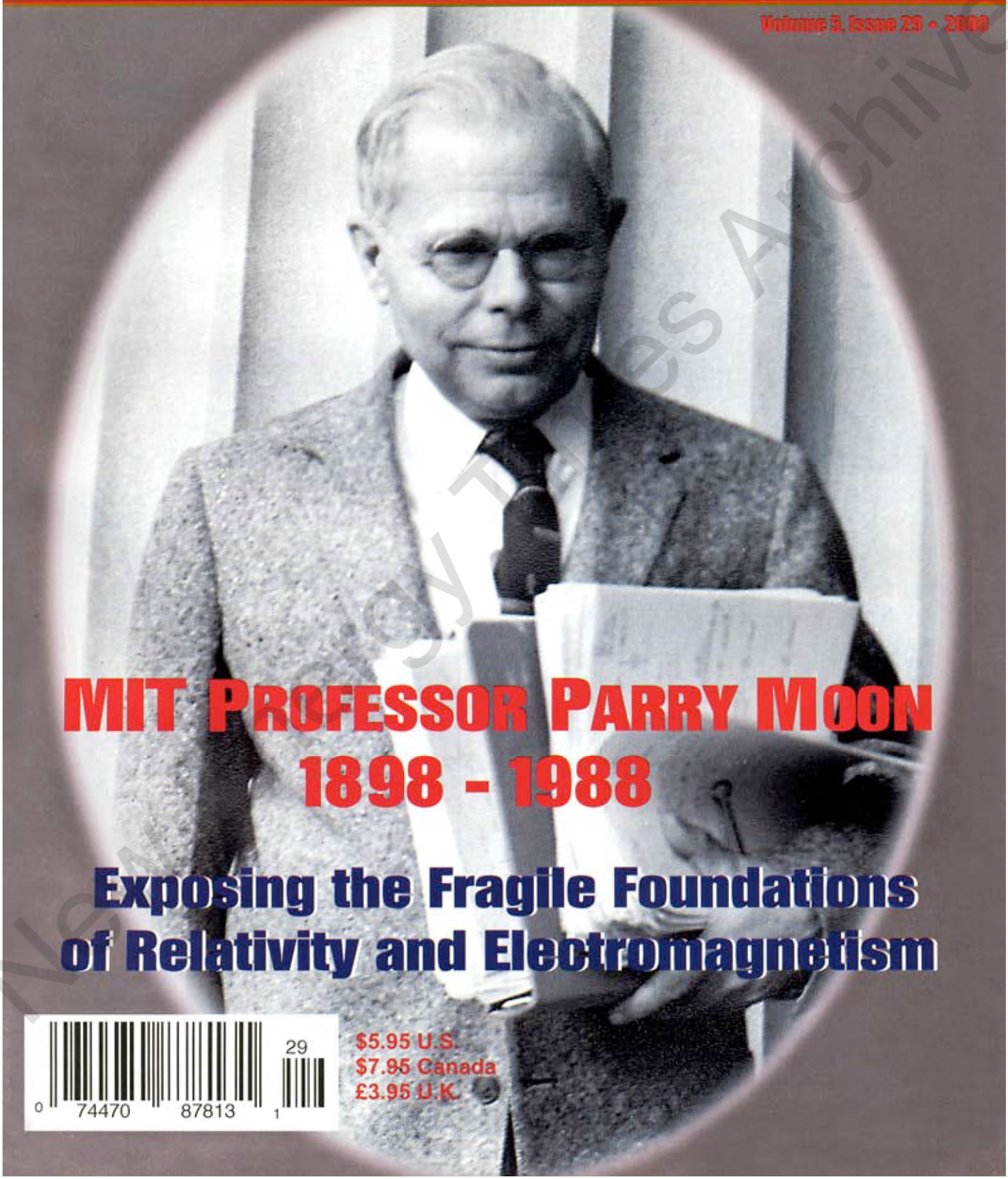

MIT PROFESSOR PARRY MOON
1898 - 1988

Exposing the Fragile Foundations of Relativity and Electromagnetism

29
0 74470 87813 1

$5.95 U.S.
$7.95 Canada
£3.95 U.K.

New Energy Times Archive

Your Doctor Says You Could Live to Age 100+ and He's Right!

The new science of Anti-Aging Medicine is the fastest growing clinical medical specialty focusing on "optimum wellness and longevity". The *New England Journal of Medicine* has called it the medicine for the next millennium. Already hundreds of thousands of Americans are benefitting from the age-reversing and rejuvenating technologies offered by our physicians.

Join the battle against aging!

A4M AMERICAN ACADEMY OF ANTI-AGING MEDICINE

A nonprofit scientific foundation

FREE!

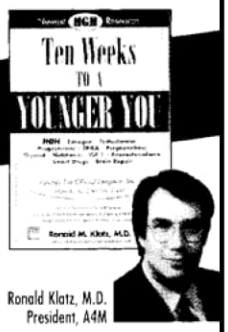

Receive a complimentary copy of *Ten Weeks to a Younger You* when you join A4M. $15.95 value.

Ronald Klatz, M.D.
President, A4M

The American Academy of Anti-Aging Medicine, whose membership includes over 7,000 physicians and scientists from 50 countries, is at the forefront of the biotechnology revolution. Keep up with the latest medical advances in controlling and eliminating the diseases of aging.

Join A4M today and receive:

- Free information
- Physician referrals
- Discounts on books, medications, nutrients, seminars, spas and medical programs

Call 773-528-4333

Log on to our award-winning web site:

www.worldhealth.net

"Among the top 15 medical web sites"
Best of the Web, Luckman Internet Yellow Pages

Technology-Oriented Benefactors and Investors Sought for Cold Fusion, New Energy, and New Physics Projects

Contact:
Dr. Eugene F. Mallove
P.O. Box 2816, Concord, NH 03302-2816
Ph: 603-228-4516 Fx: 603-224-5975
e-mail: editor@infinite-energy.com

The Secret of Nikola Tesla: The Movie

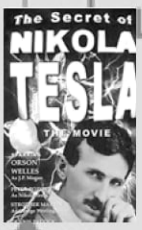

A penetrating study of the life and mind of a "scientific superman," who, against all odds, dedicated his life to the task of designing and improving technology for the service and advancement of humanity.

Starring Peter Bozovic as Nikola Tesla and Orson Welles as J.P. Mogan
1982 movie, Reissued 1999. Color, 105 min.
$29.95 North America • $34.95 Foreign

Cold Fusion Technology, Inc.
P.O. Box 2816, Concord, NH 00302-2816
e-mail: staff@infinite-energy.com http://www.infinite-energy.com
Phone: 603-228-4516 Fax: 603-224-5975

Call Infinite Energy for our media kit. 603-228-4516

When contacting our advertisers, mention that you saw their ad in INFINITE ENERGY Magazine

NOW AVAILABLE: BOOK 3 of Cloud Hill's comprehensive series on advanced heat engines

SOLID STATE HEAT ENGINES

By Wayne Proell 308 pages September 1999

This serious scientific study completes our exploration of the efficient conversion of heat to work. It includes indexes for this and the following previous books of this series:

SUPERCARNOT HEAT ENGINES (1984) 439 pp
HIGH EFFICIENCY INTERNAL COMBUSTION ENGINES (1993) 541 pp

Our newest book comprises two sections: one centers on theory and new designs for thermodielectric, thermoelectric, thermomagnetic, and Maxwellian solid state converters. A second section is experimental and offers extensive laboratory demonstration proving that superperformance can be achieved. The book offers unexploited opportunities for creating working prototypes using common laboratory equipment. These new engines can incorporate your own modifications.

From a friendly reader (C.Gridley, Sudbury, Massachusetts): 'I only wish there were more thought provoking and well written books like this, in the world'

PRICE $200 FOR EACH BOOK OF THE SERIES Prepayment is required for all books and by all customers. Price includes shipping and handling.

CLOUD HILL PRESS 763 Dora Celeste Drive, Las Vegas, New Mexico 87701 Phone and Fax 1-505-425-9505

New Energy Times Archive

Infinite Energy
Cold Fusion and New Energy Technology

Table of Contents - Issue 29, January/February 2000

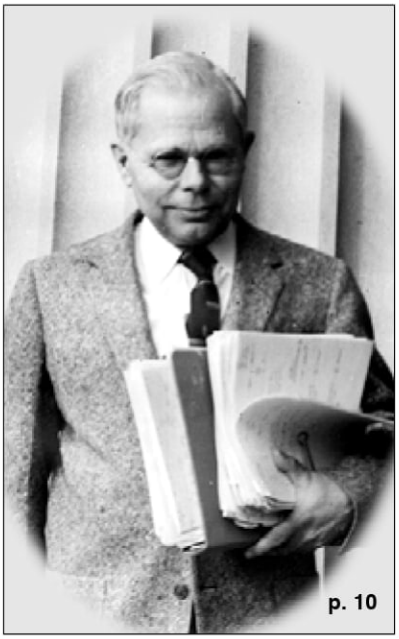

Professor Parry Moon of MIT
"On Electromagnetic Induction"

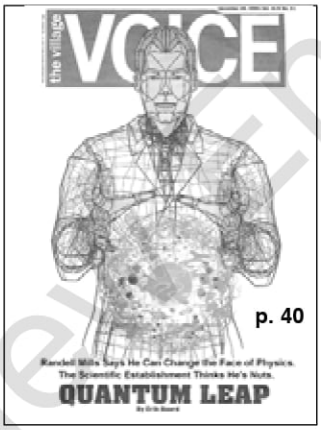

BlackLight Power, Inc.
Makes Big Waves

FEATURES

10 Fixing Electromagnetism: Step One *by Jeffery D. Kooistra*
13 On Electromagnetic Induction *by Parry Moon and Domina Eberle Spencer*
18 The American Chemical Society Conference: Cold Fusion Sessions *by Jed Rothwell*
26 The Present Status of Chemically-Assisted Nuclear Reactions *by Edmund Storms*
29 Prosaic Explanations: The Failure of UFO Skepticism *by Bruce Maccabee*
36 French Report on UFOs and Defense *by Gildas Bourdais*

TECHNICAL ARTICLES

47 Carnot is Not Universally True *by Ken Rauen*
49 Amin Cycle Demonstrates Entropy Decrease *by Ken Rauen*
54 A Theoretical Model for Low-Energy Nuclear Reactions *by K.P. Sinha*
58 Electronuclear Catalysts and Initiators: The Di-neutron Model for Cold Fusion *by Robert R. Schultz and John P. Kenny*
66 Update on Boeing Test of Robert Cook's CIP Engine

DEPARTMENTS

4 Breaking Through—Editorial *Eugene Mallove*
6 Letters to the Editor
9 Beyond the Cutting Edge—Editorial *Jeffery D. Kooistra*
39 Briefs
- New Energy Top Trend • GEET Releases New Technology
- Landmark Article on BlackLight Power, Inc.
- John McCain Responds to Cold Fusion Query

42 Calendar
43 Book Reviews
A Theory of Physical Vacuum: A New Paradigm (by G. I. Shipov) *Thomas E. Phipps, Jr*
The Innovator's Dilemma: When New Technologies Cause Great Firms to Fail (by Clayton Christensen) *Jed Rothwell*
The Refrigerator and the Universe: Understanding the Laws of Energy (by Martin and Inge F. Goldstein) *Ken Rauen*
An Introduction to Stirling Engines (by Professor James R. Senft)
52 Device and Testing Update—Portland State University Visit *by Ed Wall*
62 U.K. Energy News *by Soo Seddon*
63 A Piece of History—Guglielmo Marconi *by Barbara DelloRusso*
71 Highlights of Previous Issues
72 Classifieds, *Infinite Energy* Subscription Order Form

Cover: Parry Moon, taken on the steps of the Massachusetts Avenue entrance to MIT, late 1940. Photo: Courtesy Domina Eberle Spencer. Cover Art, Barbara DelloRusso.

New Energy Times Archive

Volume 5, No. 29
January/February 2000

Editor-in-Chief and Publisher
Eugene F. Mallove, Sc.D.

Managing Editor
Barbara A.F. DelloRusso

Associate Editor
Jeffery D. Kooistra

Contributing Editors
Jed Rothwell (Georgia)
770-451-9890
Susan Seddon (U.K.)
e-mail: sseddon@infinite-energy.com

Publishing/Editorial Assistant
Christy L. Frazier

Editorial Assistant
Elizabeth Grosser

Scientific Advisory Board
Dr. Harold Aspden
Southampton, UK
Dr. Robert W. Bass
Pahrump, Nevada
Dr. John O'M. Bockris
Texas A&M University (ret.)
Dr. Dennis Cravens
Cloudcroft, New Mexico
Dr. Peter Glück
Institute of Isotopic and Molecular Technology, Romania
Dr. Xing Zhong Li
Tsinghua University, Beijing, China
Dr. M. Srinivasan
Bhabha Atomic Research Center, India
Dr. Edmund Storms
Los Alamos National Laboratory (ret.)

Infinite Energy magazine (ISSN 1081-6372) is published six times a year by Cold Fusion Technology, Inc., P.O. Box 2816, Concord, New Hampshire 03302-2816. Subscription price: $29.95 U.S., Canada and Mexico, $49.95 other foreign. Postmaster: Send address changes to *Infinite Energy*, P.O. Box 2816, Concord, NH 03302-2816.

Infinite Energy magazine presents science and technology, generally in the field of new energy. It provides a forum for debate and discussion of frontier science. *Infinite Energy* is open to all rationally stated points of view. The material presented here reflects the views of the authors, not necessarily those of *Infinite Energy*. *Infinite Energy* assumes no responsibility for individuals who reproduce potentially hazardous experiments contained in its pages.

***Infinite Energy* Magazine**
P.O. Box 2816, Concord, NH 03302-2816
Phone: (603) 228-4516; Fax: (603) 224-5975
staff@infinite-energy.com
editor@infinite-energy.com

http://www.infinite-energy.com

Printed in the United States.
Copyright © 1999
Cold Fusion Technology, Inc.
All rights reserved.

Cold Fusion & New Energy Lectures
by Dr. Eugene F. Mallove
Editor-in-Chief INFINITE ENERGY Magazine
and author of *FIRE FROM ICE*

Generate lots of excess heat (and new thinking!) in your scientific, engineering, business, civic, or religious organization.

Tel: 603-228-4516
Fax: 603-224-5975
editor@infinite-energy.com

Fusion Information Center CD-ROM
$49.00 All Locations
Over 2900 pages covering
50 documents or issues.
The CD-ROM contains

Full Text Documents
Fusion Facts: July 1989-Dec. 1990, Dec. 1996
Journal of New Energy: Jan. 1996-Fall 1998
Cold Fusion Source Book, May 1996, 313 pp.
New Energy News: Jan. 1997-Nov/Dec 1998

Bibliographies
Fusion Facts: July 1989-Dec. 1996
Fusion Facts Abstracts: Jan. 1996-June 1999
Journal of New Energy: Jan. 1996-Spring 1999
New Energy News: May 1993-May/June 1999

The document files are searchable for key words and phrases using the Adobe Acrobat Reader 3.0.1 with the search engine option which is provided with the FIC CD-ROM package as a separate disk. Adobe Acrobat Reader 3.0.1 Included

Order from:
Cold Fusion Technology
P.O. Box 2816, Concord, NH 03302-2816
Phone: 603-228-4516 Fax: 603-224-5975
http://www.infinite-energy.com

The Planetary Association for Clean Energy, Inc.

A collaborative network of advanced scientific thinking since 1975.

advanced therapeutics
Brown's Gas
consciousness studies
electromagnetic field bioeffects
free energy devices
human rights of scientists
legacy of Nikola Tesla
nuclear and toxic waste decontamination
scalars and the fundamentals of physics

Sample copy of our Newsletter containing. . .
. . . book, video, software & CD-ROM list.

The Planetary Association for Clean Energy, Inc.
100 Bronson Avenue, Suite 1001
Ottawa, Ontario K1R 6G8, Canada
(613) 236-6265; fax: **(613) 235-5876**

Electric Spacecraft Journal Network

Keeping you informed about independent research...

The ESJ Network assists individual research efforts, facilitates cooperation among experimenters and provides an open forum for the exchange of information and ideas.

The Network welcomes those engaged in experiments, analysis, conceptual thinking, and investigative research, who are willing to interact with others. Inquiries to: 828-683-0313 or 828-683-1280, Fax: 828-683-3511; **Subscriptions:** [quarterly] *Electric Spacecraft Journal*, 73 Sunlight Drive, Leicester, NC 28748 U.S. annual subscription rates: $24; Canada and Mexico $29; Overseas $39.

NEW Books Available from Cold Fusion Technology

Earth Under Fire: Humanity's Survival of the Apocalypse
Paul LaViolette, Starlane Publications, 1997, Hardback, 405 pp.
$28.95 North America/$36.95 Foreign

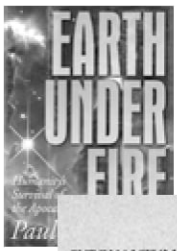

Subquantum Kinetics: The Alchemy of Creation
Paul LaViolette, Starlane Publications, 1994
Paperback, 212 pp.
$18.00 North America/$24.00 Foreign

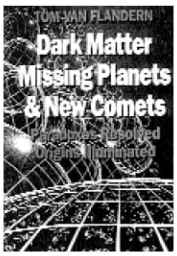

Dark Matter, Missing Planets and New Comets: Paradoxes Resolved, Origins Illuminated
Tom Van Flandern, North Atlantic Books, 1993, Paperback, 514 pp.
$25.00 North America/$30.00 Foreign

All prices include shipping and handling.

Order From: Cold Fusion Technology • P.O. Box 2816 • Concord, NH 03302-2816
Phone: (603)228-4516 Fax: (602)224-5975 www.infinite-energy.com

New Energy Times Archive

Aliens from the Basement

by Eugene F. Mallove, Sc.D.

It is coincidental that this essay touches on aliens—where they are and what energies they might command. Coincidental, because in this issue (p. 29) you will find optical physicist Dr. Bruce Maccabee's article, "Prosaic Explanations: The Failure of UFO Skepticism." *Infinite Energy* does not, of course, intend to become a magazine of UFO investigation, as I note in introducing Maccabee's article. We are very interested, however, in promoting open-minded discussion of evidence for major claimed anomalies in science beyond radical new energy sources. We are particularly concerned whenever the methodology of evidence handling is abused and masqueraded as careful investigation, as is often done by some skeptics.

For better or worse, "aliens" have entered the evolving paradigm of how science is conducted. They will affect us all. Looking back on my own career in engineering, science, and journalism, I realize that a good part of it has emerged from an interest in the possibility of extraterrestrial life—aliens. In my teenage amateur astronomy days I wondered passionately about which planets in our Solar System might be inhabited by intelligent life—or by *anything* we'd recognize as life, let alone the intelligent variety. This was at the early post-Sputnik beginning of the Space Age.

While doing coursework at MIT toward my two degrees in aeronautical/astronautical engineering, I became most interested in very advanced propulsion systems—ones that could open the Solar System for humankind, beyond the pathetic chemical rockets of then and today.

With sufficiently advanced propulsion, such as ion engines or fission-energized rockets that heat hydrogen propellant, we could at least visit more easily those places nearby where life might be found. Another link of past with present: The molten-core (liquid droplet core) fission nuclear rocket was the subject of my Master's thesis. Now defunct, the fission rocket era of the 1960s might be reborn when low-energy nuclear reactions (LENR) can perform as reliably as or better than conventional fission—sans the need for massive neutron shielding.

To be frank, my interest in rocketry and aliens came from the basement. As did many others, I had a teenage romance with dangerous pyrotechnic ignitions—an outgrowth of early 1960s basement experiments with bombs and rockets. (This was before the era of packaged model rockets, which are now commonly available.) "Basement bombing" was a typical rite of passage for apolitical, pre-terrorist-era male youth. (In 2000 such activities might land a teenage boy in jail. In 1960, the fire marshall merely told me and my friends not to do such things any more, at least not with 0.75-inch diameter copper pipes stuffed with gunpowder!) Today officialdom is sand-bagging us again. The DOE fire marshals and an academic priesthood warns us away from much more significant experiments: "Stop! Don't do cold fusion." Alas, the more things change, the more they stay the same.

Patience, aliens are coming. Paralleling rocketry, I grew interested in the search for extraterrestrial civilizations via radio-telescopes (then called CETI, now SETI). This had just begun with Frank Drake's brief microwave observation of Epsilon Eridani and Tau-Ceti back in 1960—Project Ozma. That search was in the "water-hole"—near the 1420 MHz hydrogen emission line. My fascination was intense and early. Long before Carl Sagan became a household name, as a fifteen-year-old I attended and taped one of his earliest lectures on extraterrestrial life—on a portable (reel-to-reel!) tape recorder at a local junior college in New London, Connecticut. Carl was a great salesman for aliens even then. He certainly helped sell me, a mathematics teacher's and plumber's son—not a scientist. I did not go into plumbing, but the water focus of my father and grandfather may have recapitulated itself when I entered the cold fusion—water-as-fuel—controversy.

As the noisy sixties wore on, it became clear that the Solar System, interesting as it seemed, was not enough. We just had to plan for interstellar travel if we were ever to encounter really interesting planets with intelligent beings. Especially hard to find would be "dumb ones" (Carl's words) like us, who might not have an interest in microwave signaling. There would be smart ones too. Some of the early books on SETI spoke of a Kardashev Type-II civilization, which might have gotten control of the entire energy output of its star by wrapping it in a durable cocoon. That would be quite a feat, but still just solar power writ large. We might see these societies, or so it was suggested by Freeman Dyson, by observing their infrared emissions. A Kardashev Type-III civilization might command the energy output of an entire galaxy.

This was all postulated with a straight face, with hardly a thought about where the stupendous energies of Kardashev Type-III would come from. If it wasn't solar power, what could it be? That was left unanswered. It is amazing what stuff can be discussed in polite academic circles, providing it doesn't actually *do* anything or have any direct relevance to contemporary technologies. But bring in a civilization-changing jar of heavy water that creates excess heat, and all hell breaks loose.

Maybe the aliens were deep into hot fusion, or perhaps antimatter annihilation? Later came speculation about black holes and titanic energies that might be derived therefrom. Thermonuclear fusion, the nemesis of today, seemed to me then more reachable. One of my propulsion courses at MIT incubated a paper that showed that Robert Bussard's interstellar ramjet concept seemed to be on the right track. He had the idea of scooping up interstellar hydrogen that could be used ramjet-style in a fusion propul-

New Energy Times Archive

sion system. The rocketry problem would be solved by scooping up tenuous interstellar fuel along the way—much easier said than done. In 1989, as the cold fusion age dawned, Dr. Gregory Matloff and I compiled summaries of what was then known about interstellar flight—*The Starflight Handbook: A Pioneer's Guide to Interstellar Travel*, John Wiley & Sons.

Then there are the UFOs. Even the great Sagan had had a fling with them, as did I in the early 1970s; I even investigated a few cases as an avocation. Who wouldn't be curious about all these strange reports of aliens actually here, which surfaced from time-to-time. Sagan grew inclined to dismiss all UFO reports, although he did argue that past visitations might well have happened—that we should be vigilant for any archeological signs of visits in the safe, distant past. That seemed and still seems a paradox to me: believing that "others" well might have been here 200,000 years ago and left calling cards, but are unlikely to be here now. Hmmm.

It all boils down to what the physics known to the aliens might allow them to do. If you believe that physics is largely a closed book resting on secure pillars, you might well be inclined to dismiss as bunk the reported visits and gymnastics of alleged alien craft. But certain "safe" articles have begun to appear in even the mainstream literature that suggest that star travel by very unconventional means might not be all that difficult for ETI—and for *us* eventually. When we're collectively smart enough not to deny even carefully measured, well-reproduced excess energy and nuclear products from electrochemical experiments, then maybe we'll have passed the intelligence test for starflight done with new physics. Not until then.

Scientific American, January 2000 features the article, "Negative Energy, Wormholes and Warp Drive." The ordinarily conservative, cold fusion-denying *Scientific American* editors appear quite enthusiastic about this scheme of Lawrence H. Ford and Thomas A. Roman. This is how they promote the article: "Contrary to a popular misconception, Albert Einstein's theories do not strictly forbid either faster-than-light travel or time travel. In principle, by harnessing the elusive force of negative energy, one can shorten stellar distances by bending space time around would-be star trekkers."

Editor John Rennie calls this a "legitimate scientific perspective." Why "legitimate"? Why, of course, because the authors are using the "laws of physics," meaning the "laws" that Rennie believes are *the law*. The article is "safe" for Rennie, because he knows that we are unlikely to get ourselves a bunch of "negative energy" to create the star drive. Again, mainstream scientists' speculations based on accepted "laws" is fine for those of Mr. Rennie's mold. Just let there be any claim that someone on Earth—or smart aliens elsewhere—might have solved the problems of star travel or infinite energy in a more straightforward way, and the claimants are dispatched to the appropriate Gulag of the present Inquisition.

Sir Arthur C. Clarke recently broke the *Nature* barrier via a message to Earth couched in science fiction and humor. Read his stellar essay in *Nature*, Vol. 402, November 4, 1999, p. 19, "Improving the Neighbourhood." The essay drew a bit of critical mail, perhaps because Clarke generously and courageously dedicated it at the end to "Drs. Pons and Fleischmann, Nobel laureates of the twenty-first century."

Written from the perspective of a nearby alien civilization, the essay recounts the aliens' observation that Earth civilization destroyed itself in what may have been an "industrial accident." Clarke writes slyly, "After several false starts, involving low-temperature nuclear reactions of scientific interest but no practical value, they succeeded in tapping the quantum fluctuations that occur at the very foundations of space-time. This gave them access to a virtually infinite source of energy." The aliens' perspective on we terrestrial bumblers? Clarke: ". . .by mishandling the ultimate forces of the universe, they triggered a cataclysm which detonated their own planet—and, very shortly afterwards, its single large moon."

Clarke's message may not be just an entertaining story. We should be prepared to find these "industrial accidents." One can see already that the cosmos is a very violent place. What part of that violence might be attributable to life forms remains to be learned. An attraction to aliens that for me began in the basement has brought me full circle. I have come to believe that if infinite energy based on new physics is really there for the taking, as I firmly believe it is, *of course* the aliens have it! And *of course* they could/would use it to come here. This says nothing about whether they *are* already here and what they are doing—entirely different questions. The people in SETI and the UFO communities should think about that.

ENECO

ENECO
is in the business
of commercializing
the exciting new field of
low energy induced nuclear
reactions in solids.

ENECO

University of Utah Research Park, 391-B Chipeta Way,
Salt Lake City, Utah 84108 USA
Ph (801) 583-2000 Fx (801) 583-6245 jaeger@ENECO-USA.com

New Energy Times Archive

LETTERS TO THE EDITOR

Efficiency and Surface Area

Back when the only people who had computers on their desks were hobbyists, experimenters, and HeathKit customers, a group of people got together in Kansas City and came up with a system for storing bytes on magnetic tape (the early "cassettes"). They used two different audio frequencies, one representing a "mark" (current flowing), the other representing a "space" (current off). (In some systems, the reverse convention was used where a "mark" is "off"—no matter.) The two frequencies used were harmonics of each other—that is, the higher frequency was twice that of the lower frequency. Presumably this was done to make it easy to design the circuitry.

As some of your readers will promptly notice, those who used this "Kansas City Standard" soon experienced troubles, and loading a computer usually took several tries, fiddling with different audio levels from the tape. Somebody commented later in print that "there couldn't have been a telephone engineer in the room" when that standard was thought up. You see, the telephone industry had already developed a system where several teletype (or later, computer) signals could be sent over the same line, all at once, and they knew that you were asking for trouble if any of the frequencies chosen were harmonically related. So they chose odd-ball audio frequencies like 90.6, 142.3, 176.2, 219.4 . . .

I tell this story to illustrate what might be happening now, in the area of cold fusion and related research. For many years I was a consultant to the U.S. Army in the area of electronics, avionics, and related problems at the user level. One big item on my agenda was the care and maintenance of NICAD batteries. I understand that since my retirement the Army has gone back to lead-acid batteries in their aircraft. Well, I saw this coming and told my superiors at Fort Monmouth what to do about it—but they insisted nothing was wrong. (They were using 19 cells in a 24 volt system, where commercial users have 20 cells. A nominal 24 volt system charges up at 28 volts, which is 1.47 volts per cell for 19 cells. That's just enough to make some cells overheat and boil off. The long-term working voltage for a NICAD cell not under charge is 1.25 to 1.35 volts.) You might want to remember this if you're playing with Radio Shack NICAD cells; those voltages seem to apply both to flashlight-size cells and the big ones used to start aircraft engines. I spent many hours measuring individual cell voltages under charge and under load. A useful "table-top" experimenter's activity!

So now, back to the main point: has there ever been a competent storage battery engineer involved in cold fusion experiments? Here's the connection:

Early experimental cells (a "battery" is two or more cells connected together) used solid metal plates of suitable size, immersed in the electrolyte and connected to the external circuit by wires attached to each plate. Since the chemical action between the metallic plates and the electrolyte occurs at the surface of the plates, the efficiency of the cell is directly related to the surface area of the plates. So soon we began to see cells with multiple plates, interleaved with a porous insulating sheath between them. In the case of lead-acid cells, this was then modified into a lattice-like plate, with holes stuffed with a paste-like substance, mostly consisting of particles of the same material as the plates which held them all together. (I am not an expert on lead-acid batteries and this is only an approximation for illustration. The whole point is, the surface areas of all the plates must be optimized to the highest practicable value.)

In NICAD cells, "sintering" was used. A sintered plate consists of a large number of small balls, or pellets. These pellets are made of the same metals as formerly comprised the plates. The sintering process involves pouring the pellets into a mold which conforms to the desired plate dimensions, vibrating them so they settle into a minimum volume, applying pressure, and heating. The word "sinter" means "to cause to become a coherent mass by heating without melting." So you must be careful and not apply too much heat. The result is a plate practically identical to the original solid metal plates, but which now is totally porous and with a surface area many orders of magnitude over the original plate area.

Assuming no overwhelming theoretical reasons why this would not work in our primary field of interest—or maybe in spite of them!—here is an opportunity for experimenters to have a field day. We know practically nothing about how this can be applied to cold fusion and related cells. What is the optimum size of the pellets? How do you produce them so they don't have cracks? What pressures and temperatures work best in the sintering process? (We don't want the touching sintered surfaces to behave like cracks.) How thick can the plates be before internal heating destroys them? Obviously, if there are local areas of high activity, the pellets cannot be very small or a group of them would simply melt. But even if the pellets are fairly large (pea-sized) and only three or four layers thick, the principle remains valid—greatly increased surface areas where reactions can occur.

I am aware that not all cold fusion reactions occur at the surface of the electrode; mention is often made in the literature of sites near the surface. But I think my point about efficiency being directly related to total surface area is still valid.

Don C. Maier
Enterprise, Alabama

✍ ✍ ✍

Theology and Cold Fusion

I'm writing this letter to the editor to offer some comments on your article (with John O'M. Bockris) entitled, "Is the Occurrence of Cold Nuclear Reactions Widespread Throughout Nature?" In this article, you mention the fact that there are a number of thoroughly documented cases of men who have subsisted on one communion wafer a day while doing heavy manual labor, and you go on to suggest that this might be explained by biological cold fusion.

I would like to suggest that a little theology brought up to date to fit together with the findings of modern science might better explain this. (I trust you give space to dissenting views in your magazine.)

As I see it, the key to explaining this is the concept of grace. Grace may be defined as (Holy) Spirit which has not been transformed into any created thing by an act of creation. I believe that all creation has as its basic substance Spirit. St. Augustine says that God created everything out of nothing, but this idea repels me because it gives the Creator so little to work with. I feel that Spirit can neither be created or destroyed, but it can be used by prayer to create things and to modify things already created as God permits (larger acts of creation requiring larger amount of grace). The communion wafer is the body of Christ which is caused to appear as a wafer after consecration by grace, and it imparts grace to worthy recipients. This grace can be used by prayer to create food for a human body.

This is my explanation for this phenomenon.

Dennis P. Allen, Jr.
Spring Lake, Michigan

Editor's Note: We do, indeed, have space for dissenting views, as we here demonstrate. We

New Energy Times Archive

think that many readers will appreciate your interesting theological perspective, which though seeming to be "outside" what is ordinarily considered science, has its place. You bring up the question of how prayer may affect the human body. This is a subject of ongoing scientific investigation these days at places such as Harvard Medical School—prayer not only by patients but by others praying for them. The debate over purported positive results from those investigations will not easily subside.—EFM

✍ ✍ ✍

Futurists and Cold Fusioneers

Many thanks for the prompt and generous response to my request for a sample copy of *Infinite Energy*. The book and videotape were not expected, and I used the book as the focus of my abstract on cold fusion research, with a long backup note describing your very interesting magazine. And I juxtaposed the abstract of your materials with an abstract of Arthur C. Clarke's essay, which touts cold fusion.

I remain very interested in this potential development. Futurists are open to a lot of possibilities, especially if they are plausible and well-argued. A number of futurists are keen on nanotechnology, which, similar to cold fusion, offers abundant promise. It's simply a matter of making a bridge to futurists, if cold fusion is as important as you make it out to be. I don't know anything about the physics involved with cold fusion, but as a social scientist with political science leanings, I can appreciate the ongoing struggle between alternative energy sources. As a citizen, I strongly favor a level playing field, as the energy factions fight it out over cost, safety, and environmental cleanliness. And we also have something in common, having both been attacked by the infamous Robert Park. I note in Issue No. 25 of your magazine that he has scoffed at cold fusion. He also trashed futurists in a vaporous *New York Times* op-ed piece, which makes totally off-the-wall generalizations about futurists.

What next? You want publicity and I'm looking for good ideas about what is possible, probable, and preferable. I selectively report on authoritative books and articles, so perhaps you can bring to my attention such items from your press or elsewhere that make a good case for cold fusion in non-technical or semi-technical prose. I am particularly interested in plausible forecasts and scenarios as to when cold fusion might be commercially available. Is it right around the corner in 2002, as suggested by Arthur C. Clarke's whimsical timeline, or is it many decades off, similar to the general consensus for (hot?) fusion energy, which has already consumed billions in research?

Best wishes in your considerable efforts to promote cold fusion.

Michael Marien
Editor, *Future Survey*

Editor's Note: Thank you very much for your interest in cold fusion, and for writing about it in your excellent Future Survey, *Volume 21, No. 11, November 1999 (www.wfs.org) after you received our materials. It is indeed a pleasure to work in a collegial manner with other open-minded, forward looking individuals like yourself. You should wear proudly the badge of honor of having been attacked by the infamous Robert Park. He may be the darling of Op-Ed pieces, but he is dead wrong about cold fusion, predicting future technologies, and much else. Cold fusion energy is not decades off. Sir Arthur Clarke's 2002 may be about right. Several more years would be my guess for very significant practical applications, although I may be too optimistic— I did think we'd have them by now. Unlike hot fusion, however, cold fusion has not consumed vast billions of dollars of taxpayer money with no promise of practical technology anywhere in sight. Hot fusion—at least of the tokamak variety—"is the energy of the future and always will be."—EFM*

✍ ✍ ✍

Thanks Again, Sir Arthur C. Clarke

Arthur C. Clarke mentioned your magazine in his book of essays and I would like to give a subscription to my son, who is a freshman majoring in chemistry and physics at Princeton. However, I need to know how much a year's subscription will cost and I've enclosed a SASE for your reply.

Thank you very much.

Mary E. McCabe
Austin, Texas

Editor's Note: Thank you for your excellent choice of a prospective gift for your son. Armed with Infinite Energy, *he will either help set his Princeton physics and chemistry professors straight—or he will get into deep hot water! Please let us know how it turns out!—EFM*

✍ ✍ ✍

Controlled Flight Took Awhile Too!

Your "Breaking Through" Editorial in the last issue (No. 28) is far too depressive in tone. There is the possibility that you are expecting too much too soon.

The effect is real, as readers of Mizuno's book and *Infinite Energy* know. The problem seems to be that it does not sustain or continue for indefinite lengths of time. But there could be many reasons for this. If you think of an ordinary nuclear reactor as an analogy, it took many years, and, in a process still continuing, much experimentation, to get the parameters just right. Fuel concentration, moderator presence, renewal of both fuel and moderator, cooling processes, and so on.

Suppose, for some reason, that the concentration of catalyst and of the reacting material has to be exactly correct. Then if the process (fusion) starts it will at the same time ensure its own termination. A way then has to be found to ensure that the right concentrations of catalyst and reacting material remain exactly right. This could be the problem. If so, it will not be easy to solve. But not impossible, only difficult.

Establishment opposition, which you give such prominence to, should properly be ignored. On December 17, 1903, Orville Wright made the first controlled, sustained, and powered flight. Flyer-I reached a height of ten feet, stayed aloft for twelve seconds, and covered a distance of 120 feet. Many cold fusion experimenters are way beyond this stage.

Stay optimistic!

Ramon Prasad
London, England

✍ ✍ ✍

Solid Research Forges On

Just read the editorial on your website. It is sad that things like this happen, but at least we can be happy that Boscoli was unmasked early. In the regular structure of the sciences, he might become entrenched for decades. The one advantage to being on the fringe of scientific study is the absolute rigor with which these things must be proven. There is also the possibility that Boscoli *et al.* are provocateurs engaged in the campaign to discredit this research, or are being used for that purpose.

There is still plenty of solid research to work on. We will succeed. For the sake of the human race, we have to succeed. Keep up the good work.

Jon Norris
La Grande, Oregon

✍ ✍ ✍

Update on Nuclear Augmented Combustion

Editor's Note: We received this excellent experiment update from Harry Taplin of Crystal Energy, Inc. This technology was the subject of our cover story in IE *No. 18. This seems to be continuing, hard evidence of highly anomalous behavior in lithium-doped combustion systems.—EFM*

I built two identical furnaces for a very interesting experiment. One furnace was kept entirely clean for reference combustion. In the second, I initiated the "Crystal" reaction using one of our combustion catalyst formulations.

In the side of each furnace, I cut a circular

New Energy Times Archive

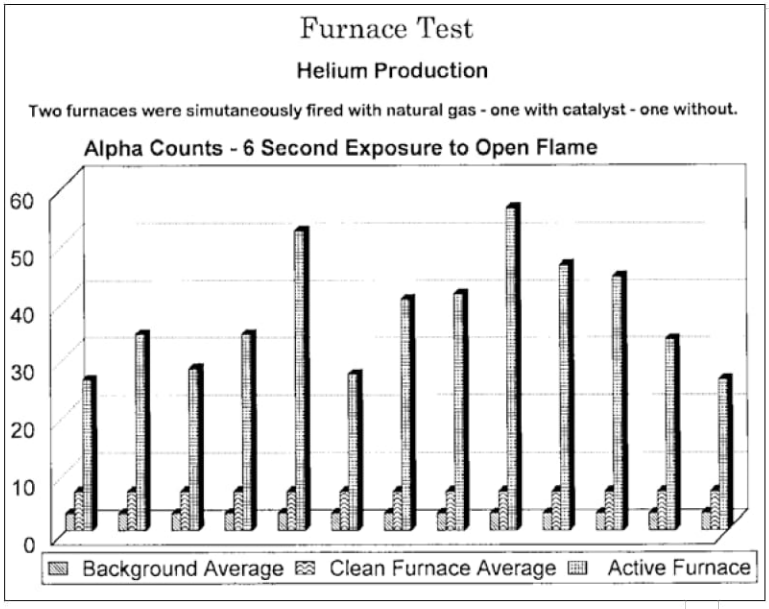

2 – 5 March 1999
Locomotive Engine Type GP 38-2 [2000 hp]

Throttle Position	% Power	Percent NOx Reduction	Zero Dilution NOx (@ 0% O_2) Reduction (PPM)
Idle	3%	39.0%	3,000
1	5%	32.6%	4,005
2	12%	12.4%	1,500
3	20%	23.4%	1,890
4	41%	26.2%	2,490
5	55%	21.6%	2,190
6	67%	20.1%	2,085
7	86%	18.2%	1,890
8	100%	29.6%	3,450

access into which I inserted a G-M detector for alpha (helium) detection during the test.

You've got to admit that a red-hot furnace full of flame is an unusual environment for an alpha detector, perhaps a *first*! To prevent damage to the detector, I designed a water-cooled jacket with an air cooling system for the window. To prevent too much heat exposure, I only took readings for 0.1 minutes (six seconds). After each test in the active furnace, I rechecked background counts and also checked counts in the "clean furnace"; both sets of check readings remained fairly consistent. I was providing natural gas fuel to both furnaces from the same piping system at the same pressure through Bunsen burners. Both were adjusted for identical flames and the furnace exhausts stayed within 20-40°F.

This experiment is another version of the bench top apparatus I have at your laboratory. I think the data is quite significant. I have attached a graph of the test results. The detector is still working just fine. The counts are the same in each furnace under cold conditions.

Also, I am including results on a 2,000 horsepower Diesel locomotive test done earlier this year in Chicago. We didn't see any energy balance changes, but NO_x pollution went down significantly. It was a short test, two and a half days, compared to other Diesel trials lasting thousands of miles which have generally averaged 10 to 13% fuel savings.

You know this is too simple to believe, just a few ml of the liquid catalyst in the fuel tank is all it takes. I have a hard time grasping that such a small quantity of catalyst can produce such an effect, but it does. We have tons of data using SAE, ASME, and Federal protocols, most with good results.

We have the genesis of a new energy source that produces heat, oxygen, and helium. I think this is better than carbon monoxide, nitrogen oxides, reactive hydrocarbons, and a long list of other toxic by-products that haven't received much publicity. Our automotive Federal Test Procedure (FTP) test program of a few years ago, sponsored by SCPCD (Southern California Pollution Control District), showed that our fuel catalyst was at least three times as effective reducing carbon monoxide as reformulated gasoline containing MTBE.

Harry Taplin
Crystal Energy, Inc.
Thousand Oaks, California

"Websites Worth Your While"

http://www.radwaste.org
"One stop shopping" for anyone interested in radioactive waste. A large and well-organized site.

http://www.worldscientific.com
World Scientific publishes some of the most interesting and useful science books in, well, the whole world!

http://www.lindsaybks.com
If you've never heard of Lindsay Books, it's high time you did. A valuable resource of tried and true knowledge from the old days that no frontier scientist can do without.

http://www.chaucer.unh.edu/News.html
Links to online editions of U.S. daily newspapers that can be found on the Web. Keep up to date on hometown news wherever you may be.

—JDK

Infinite Energy does not endorse these sites or products.

Errata

Figure 1b of Harold C. Joseph's "Nuclear Processes in Palladium Deuteride," in Issue 27 (pp. 67-72), used an incorrect dimension to indicate the classical radius of the innermost electrons of palladium. The correct dimension is 1150 fm, not 11.50 fm. A decimal point was incorrectly added.

In Issue 28, a letter to the editor from Robert Parmenter ("Keep Laws of Physics in Mind," p. 6) had a mistake in the equation. The equation should have read as:

$$2p + e \rightarrow d + \nu + 1.44 \text{ MeV}$$

***Infinite Energy* Solicits Your Manuscripts Dealing with:**

- Experimental Results in Cold Fusion and New Energy
- Theoretical Ideas
- Book Reviews
- Contemporary and Historical Opinions
- Historical Articles
- Short Articles on Conventional Energy or Alternative Energy

Contact Barbara DelloRusso, Managing Editor, to receive Instructions to Authors for our preferred format.
staff@infinite-energy.com or 603-228-4516

New Energy Times Archive

Jeffery D. Kooistra

The Sins of the Fathers

"...punishing the children for the sin of the fathers to the third and fourth generation. . ." (From Exodus 20: 5 NIV)

Most of us who are over thirty-five can remember being taught as children that dinosaurs were cold-blooded reptiles. To see a modern day example of a "dinosaur," one was directed to look at alligators and lizards. It was not uncommon in those pre-computer days for low budget "cave man movies" to use enlarged footage of Gila monsters (small lizards) for their dinosaurs.

Nowadays we have an entirely different picture of dinosaurs. Due largely to the work of Dr. Robert T. Bakker, it is now recognized that many dinosaurs were not cold-blooded, but warm-blooded. And one cannot look just to the reptiles for modern day versions of dinosaurs; you have to look to the birds also.

In his book *The Dinosaur Heresies* (William Morrow and Co., 1986), Bakker recounts the story of his own battles with the paleontological mainstream in getting them to realize that 1) the cold-blooded dinosaur paradigm was not correct and 2) it should never have been set in stone in the first place.

On page 27, Bakker offers some commentary on how it is that the cold-blooded view could have prevailed in paleontology for so long when it was wrong, and these comments are worth keeping in mind by those of us who also fight established paradigms. Bakker says:

> Generally speaking badges are harmful in science. If a scientist pins one labeled "Reptile" on some extinct species, anyone who sees it will automatically think, "Reptile, hmmm. . . that means cold-blooded, a lower vertebrate, sluggish when the weather is dark and cool." There are never enough naturalists around, in any age; so most scientific orthodoxy goes unchallenged. There are just not enough skeptical minds to stare at each badge and ask the embarrassing question, "How do you know the label is right?"

Be kind to colleagues, ruthless with theories, is a good rule. A scientific theory isn't merely idle speculation, it's a verbal picture of how things might work, how a system in nature might organize things—atoms and molecules, species and ecosystems. But old paleontological theories too often aren't treated roughly enough. Old theories—like the reptilian nature of dinosaurs—are accepted like old friends of the family. You don't yell at old Aunt Cecilia. So hundred-year-old dinosaur theories live on without being questioned, and too often they are assumed to be totally correct. Even when such a theory is caught in an error, it's likely to be excused.

Traditional dinosaur theory is full of short circuits. Like the antiquated wiring in an over aged house, the details sputter and burn out when specific parts are tested. I have enormous respect for dinosaur paleontologists past and present. But on average, for the last fifty years, the field hasn't tested dinosaur orthodoxy severely enough.

It would require just a few word changes to make Bakker's comments apply equally well to physics.

I like Bakker's book because it was instrumental in getting me to think about the way that "established truth" in science gets that way. From Bakker's recounting of the academic history, it is clear that the "cold-blooded dinosaur theory" was never properly verified or subject to test. Although a great deal of effort went into assembling the cold-blooded paradigm, almost none went into testing the foundations of that paradigm. By the time Bakker came along, what had been merely a reasonable hypothesis at the beginning had grown into absolute truth, with everyone in the field *assuming* that the Fathers of Paleontology had built on a firm foundation.

Although I titled this column "The Sins of the Fathers," I don't think that's entirely fair. They could hardly have known ahead of time how much the future would come to depend upon what they'd built. No doubt many of those Fathers would be aghast at how some of their musings have been elevated into Holy Writ.

The problem is certainly widespread in science. If one wants to see just how widespread, there are lots of books to read. One might want to read Robert Schoch's *Voices of the Rocks* [Crown Publishing Group, 1999] to see how this problem manifests itself in Egyptology. Eric Lerner's *The Big Bang Never Happened* (Vintage Books, 1991) does the same for cosmology, as does Tom Van Flandern's *Dark Matter, Missing Planets, & New Comets* (North Atlantic Books, 1993, now available from *IE*, see p. 3). And the best book on the subject in electromagnetics, O'Rahilly's *Electromagnetic Theory* (Dover, 1965) is out of print (we hope to reprint it ourselves in the future).

Thomas Kuhn's *The Structure of Scientific Revolutions* (University of Chicago Press, 1962) is, of course, the book that both defined and brought to the forefront the term "paradigm." On page 23 (of the second edition), Kuhn says of new paradigms when they first appear: "Paradigms gain their status because they are more successful than their competitors in solving a few problems that the group of practitioners has come to recognize as acute. To be more successful is not, however, to be either completely successful with a single problem or notably successful with any large number." So as it stands, philosophers of science are certainly familiar with the nature of paradigm shifts and with how it is that paradigms both become established and fall out of favor. However, it seems to me that the philosophers need to do a great deal more work to be able to answer this question: "Just how far off the mark can a theory get and still continue to give the appearance of being right?"

There is a silver lining that comes with the recognition that somewhere in the past researchers took a wrong turn. The implication is that, if we go back far enough, perhaps we will find the right turn that should have been taken instead down "the road less traveled."

That could make all the difference.

New Energy Times Archive

Fixing Electromagnetism: Step One

Jeffery D. Kooistra

Recognizing that there is a problem is usually the first step on the way to fixing that problem. However, if a problem is recognized, argued over, and then forgotten for a generation, it will not magically solve itself during that time. This is exactly what has happened with classical electromagnetism.

In this issue of *Infinite Energy*, we are reprinting the excellent article "On Electromagnetic Induction" by the late MIT professor Parry Moon and his wife Domina Eberle Spencer because it serves as such a useful introduction to the scientific world that "there is a problem."

As is noted in the quote by J.T. Tate which opens the paper, "There seems always to have been an element of mystery connected with the phenomenon [homopolar induction], and an element of doubt on the part of many physicists as to the power of electromagnetic theory to solve the problem uniquely." Moon and Spencer themselves say with respect to this specific problem: "In each case, interest seems to rise anew to a sharp peak, after which it gradually declines, leaving the subject much as it was before. The violence of the controversies and the complete lack of agreement, at the end as well as at the beginning, indicate that the usual treatments of electromagnetic induction must be far from satisfactory."

The Tate quote is from 1922. This article by Moon and Spencer first saw print in 1955 in the *Journal of the Franklin Institute*, Vol. 260, pp. 213-226. Fast-forwarding twenty years, one can find a superb article dealing with aspects of induction by Jovan Djuric entitled, "Spinning Magnetic Fields," in the *Journal of Applied Physics*, February, 1975. Read this and it becomes clear that fifty years after Tate made his comments, the issues still were not resolved. Fast-forwarding yet another twenty years, one comes to "Maxwell's Equations in a Rotating Medium: Is There a Problem?" by Pellegrini and Swift (*American Journal of Physics*, August, 1995). They conclude, of course, that there is.

I first came to know that there were problems in the foundations of electrodynamics when I encountered the work of Peter Graneau on longitudinal forces in wires (see for instance, *Newtonian Electrodynamics*, World Scientific, 1996). But it was when I began to work on the problem of the Marinov motor (see *Infinite Energy* Nos. 17, 18, 19, and 27) that I found out just what an ocean of uncertainty classical electromagnetism really is. Since the Marinov motor contains both moving magnetic fields and rotating media (indeed, I believe it to be a kind of homopolar motor), I suppose it was inevitable that I'd find myself drawn into the debates. Like most physicists, I had never been taught that there were unresolved questions in electromagnetism. Indeed, consulting my notebook from my own undergraduate electromagnetism class, I find this comment, quoted from my instructor: "We will look at the synthesis of Maxwell, and how relativity makes it inevitable." Oh, was that ever a grand glossing-over of the truth! [Curiously enough, the textbook I used in that class, *Electromagnetic Fields*, 2nd ed. by Roald K. Wangsness (1986), was actually less doctrinaire than most. For instance, it acknowledges certain subtleties in the nature of the equations for forces between circuits that are cavalierly dismissed in other well-regarded textbooks, like *Foundations of Electromagnetic Theory*, 4th ed. by Reitz, Milford, and Christy (1993).]

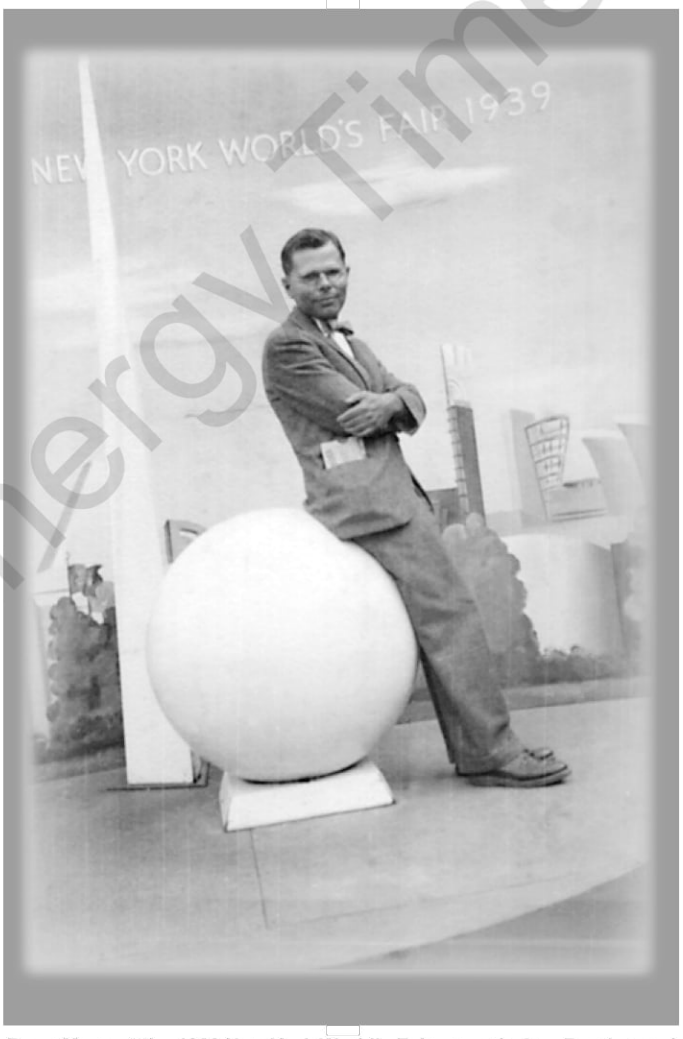

Parry Moon at the 1939 New York World's Fair a year before Domina and Parry met. *Photos: Courtesy Domina Eberle Spencer*

If I were asked to suggest one book that researchers should read that would help them understand the disarray that electromagnetism is in, I'd send them to Alfred O'Rahilly's *Electromagnetic Theory* (Dover, 1965). Unfortunately, this book is almost impossible to find. But my second choice is not remotely obscure and should be familiar to everyone. Indeed, it should be required reading for everyone. That book is Volume 2 of *The Feynman Lectures on Physics* (Feynman, Leighton, and Sands, Addison-Wesley, 1964).

If one were pressed for time and wanted to know which specific *chapter* to read, I'd direct him to Chapter 28. Though this chapter does not specifically deal with the problem of electromagnetic induction (though all the problems are deeply interrelated), it does discuss the general problem of difficulties with Maxwell's equations. In this chapter, Feynman says:

Classical mechanics is a mathematically consistent theory; it just doesn't agree

New Energy Times Archive

Domina Eberle Spencer's Comments on Moon

These comments are excerpted from a talk given by Professor Domina Eberle Spencer about her late husband, Parry Moon, at the Natural Philosophy Alliance meeting in Philadelphia on Valentine's Day, 1998 [Parry Moon's 100th Birthday].

. . .Parry got a job as soon as he graduated, doing what he thought was the most important thing in the world—designing transformers. This was what he had dreamed of when he was a little boy. He got a job with Westinghouse, which was certainly one of the best companies of its type in the world. But, he found that there was not much engineering and practically no originality in the work that he could do at Westinghouse. To design a transformer, they merely looked up in their file the design that was almost the same as the one that was requested, made a very slight modification, and that was it. . .

Ernie Gilman wrote to Parry about the wonders of MIT, where you could do original research. And, so, Parry applied for a position at MIT as a research assistant and they gave it to him. That was wonderful.

He came to MIT to be the assistant to Vannevar Bush. Vannevar Bush was young then; he had just gotten his doctor's degree and he was full of interest in the theory of relativity. But, he was full of questions too. Some of you may know the 1926 paper in which Vannevar Bush rediscovered, independently, Weber's equation for the force between moving charges.

Vannevar Bush had also decided that he wanted to disprove Einstein's special theory of relativity experimentally and set Parry to work on doing the experimental work for this. I have never been able to find out exactly what this experiment was, but I hesitated to quiz Parry on it, because it brought up many difficulties. Perhaps we can someday discover what this experiment was. But, I do not know. I do know that it involved grinding gun powder with a mortar and pestle. And, Parry was alone in the laboratory doing this one day when, suddenly, it blew up. He was blackened from head to foot, so much that when he was taken to St. Elizabeth's Hospital in Boston, they could not tell whether he was black or white. He looked black, so they assumed he *was* black, and they didn't bother to do a thing for him in the emergency ward. Black object, inert, nearly dead.

Archive Photo

MIT's Vannevar Bush

It was several hours before the head of the electrical engineering department, D.C. Jackson, who was a great man, discovered what had happened to Parry. He came storming over to St. Elizabeth's. He said, "That's the greatest young man we have at MIT. You've got to save his life." And they said, "We're trying very hard to save his life." And they did. He was in the hospital six months, had innumerable operations—plastic surgery, transplanting pieces onto his right arm, which was very badly burned on the underside. And he eventually lost his left eye during that period. They tried to save it, but they had to remove it. But, the substitute was so good that for the first year or so that I knew him, I didn't know that it was artificial.

His life was saved; he came back to MIT. He didn't go back to work as Vannevar Bush's assistant. Instead, he went to work on high voltage insulation research, which was just as dangerous as the work he had been doing on his first project, but he was more careful and was never injured by it. . .

with experience. It is interesting, though, that the classical theory of electromagnetism is an unsatisfactory theory all by itself. There are difficulties associated with the *ideas* of Maxwell's theory which are not solved by and not directly associated with quantum mechanics. You may say, "Perhaps there's no use worrying about these difficulties, since the quantum mechanics is going to change the laws of electrodynamics, we should wait to see what difficulties there are after the modification." However, when electromagnetism is joined to quantum mechanics, the difficulties remain. So it will not be a waste of our time now to look at what these difficulties are. Also, they are of great historical importance. Furthermore, you may get some feeling of accomplishment from being able to go far enough with the theory to see everything—including all of its troubles. (p. 28-1)

It is worth noting that Feynman says that the problems of classical electrodynamics don't go away when it is joined with quantum mechanics. Of course, as one of the Fathers of QED, Feynman ought to know. He felt strongly enough about this point to make it again:

But the difficulties do not disappear in quantum electrodynamics. That is one of the reasons that people have spent so much effort trying to straighten out the classical difficulties, hoping that if they *could* straighten out the classical difficulty and *then* make the quantum modifications, everything would be straightened out. The Maxwell theory still has the difficulties after the quantum mechanics modifications are made. (p. 28-10)

I'm beginning to suspect that the only reason we have a quantum theory distinguishable from classical electromagnetism is because the latter was never properly finished. Both of these areas of physics deal with charges and particles and light and fields. Had the problems of electromagnetism not been shuffled off into obscurity by the arrival of relativity (which supposedly "solved" everything) and atomic physics, we might not be arguing today about whether or not physics can be unified.

The December 1999 issue of *Scientific American* has been dubbed the "End-of-the-Millennium Special Issue" (even though this title should go to the December 2000 issue). This issue promises to tell us "What Science Will Know in 2050," and contained therein is a piece by Nobel Laureate Steven Weinberg called "Unified Physics by 2050?" Weinberg says:

Einstein devoted the last 30 years of his life to an unsuccessful search for a "unified field theory," which would unite general relativity, his own theory of space-time and gravitation, with Maxwell's theory of electromagnetism. Progress toward unification has been made more recently, but in a different direction. Our current theory of elementary particles and forces, known as the Standard Model of particle physics, has achieved a unification of electromagnetism with the weak interactions, the forces responsible for the change of neutrons and protons into each other in radioactive processes and in the stars. . . (p. 68)

Anyone capable of making an honest appraisal of these comments will immediately notice that unifying one theory with another one already known to have inconsistencies in it will not yield a problem-free unified theory. Perhaps one of the reasons Einstein failed is because he never had a consistent theory of electromagnetism to work with in the first place. In another article in the same *Scientific American* by John Maddox entitled "The Unexpected Science to Come," Maddox says : "The central problem in fundamental physics is that quantum mechanics

New Energy Times Archive

and Einstein's theory of gravitation are incompatible with each other" (p. 67). Well, since electromagnetism and, thus, quantum electrodynamics, are not even self-consistent theories, as Feynman pointed out, it should hardly come as a surprise that it cannot be reconciled with gravitation, which isn't a self-consistent theory either, it too owing much to Maxwell.

As I said at the beginning, recognizing that there is a problem is the first step in correcting it. Yet even when the problem is pointed out, many scientists have trouble believing it. "How could these problems have gone unnoticed for so long?" they might ask, even though you can point out in even the most acceptable of publications that the problem certainly has not gone unnoticed by *all*. Even more likely is this question: "How could all our electric and electronic machinery and devices work so well if the foundations of electromagnetism are unsound?"

Let us consider this question by looking at a few relevant anecdotes.

As I write this, it looks like the U.S. has lost yet another Martian space probe, the Mars Polar Lander. This catastrophe follows close on the heels of an earlier loss a few months ago of the Mars Climate Orbiter, caused, apparently, by mixing English units with metric ones. Both of these probes spent years on Earth being built and checked out, and both spent many months in space on the way to Mars before failing. How could these probes have worked so well and their problems gone unnoticed for so long even though their problems were so severe that they'd result in a complete mission failure? One answer is that problems can escape detection until specifically tested for.

In Domina Eberle Spencer's "Comments on Moon" on page 11, she mentions that Parry Moon worked with Dr. Vannevar Bush. In his book, *Pieces of the Action* (William Morrow and Company, 1970), Bush tells the story of how the highly respected Professor Abram Joffe once visited MIT from Russia and told of a new insulating material that was vastly better than existing materials. This excited Bush, but after a few months of experimenting, he couldn't duplicate the results. So he went to Russia to see for himself how Joffe was making this material. As it turned out, Joffe's idea was entirely mistaken. For months, Joffe and his colleagues had pursued a false path. How could this have happened? As Bush puts it: "The sad fact was that, whenever a worker obtained a result that supported the theory, he reported it with exultation. If he obtained a contrary result, he knew he must be wrong" (p. 178). Such was their trust in the great Joffe.

In close connection with this, note also from "Spencer's Comments" that Parry Moon was left unfulfilled by his work at Westinghouse. He found that, "To design a transformer, they merely looked up in their file the design that was almost the same as the one requested, made a very slight modification, and that was it." It is largely the same with electronic equipment today. None of our radios, none of our TVs, none of our computers or Nintendos or our test equipment are designed to find, let alone exploit, the "problem" areas in electromagnetism—99.999% of all our electronic equipment is designed to work, not to go looking for trouble.

But perhaps the biggest impediment to progress on these problems is expressed by Paul Feyerabend in his autobiography *Killing Time* (University of Chicago Press, 1995). Like Thomas Kuhn, Feyerabend was another exceptional philosopher of science, and also like Kuhn, he started out as a physicist. One of his professors shortly after World War II in Germany was Felix Ehrenhaft, considered a charlatan by many of the other physicists because his views were so counter to the accepted wisdom. But one day Ehrenhaft set up his experiments and invited everyone to take a look. As Feyerabend describes it:

> Did Ehrenhaft convince anybody? He certainly did not convince the theoreticians (though Paul Dirac wanted information about the strength of his magnetic poles). The senior Thirring saw problems, but for the rest the phenomena Ehrenhaft produced in such abundance were simply a *Dreckeffekt*—a result of as yet unknown disturbances. An iron curtain formed by a firm belief in the excellence of Maxwell's equations, and so on and so forth, protected physics from Ehrenhaft—an iron curtain of precisely the kind that had protected Galileo's opponents. To penetrate the curtain we organized a special seminar, in which we

Moon continues on page 17

Parry Moon and Domina Eberle Spencer, taken in 1974 when they received the Illuminating Engineering Society's Gold Medal.

[Excerpts from a letter from Domina Eberle Spencer to Barbara DelloRusso, Managing Editor, *IE*].

Thank you for your letter of December 9, 1999. I am delighted that you are planning to put Professor Moon's photo on the cover of *Infinite Energy*. The idea of a future article about our work on the foundations of electrodynamics also appeals to me.

The photo shows Professor Moon in front of the columns of MIT looking as he did when he was teaching at MIT. This is my favorite photograph of him. It was taken by a student in the late 1940s. His tie is slightly askew and his arms are full of books and papers. It is the way he looked to his students.

Thank you for letting me see the two articles which you propose to publish in *Infinite Energy*. You might be interested in knowing that Dick Feynman was in my undergraduate course in theoretical physics at MIT. We occasionally studied together. But I never talked to him about our universal time postulate on the velocity of light or about our new Gaussian electrodynamics. Dick Feynman died about a week before Professor Moon in 1988.

New Energy Times Archive

On Electromagnetic Induction

Parry Moon and Domina Eberle Spencer

Reprinted from the *Journal of the Franklin Institute*, **260**, 213-311, 1955.

"There seems always to have been an element of mystery connected with the phenomenon [homopolar induction], and an element of doubt on the part of many physicists as to the power of electromagnetic theory to solve the problem uniquely. In the history of the development of the subject there has been a singular freedom from differences of opinion as to the experimental results, but at the same time singular lack of agreement as to the way these results were to be interpreted."

J. T. Tate[1]

"It cannot be urged that it has been shown experimentally that moving circuits and changing currents are rigorously equivalent as regards induced electromotive forces. . . It is very easy to let the notation carry the burden of the argument. . .and to hold that the value of curl E is related to the rate of change of B in every case in the way stated by the last equation [curl E =–∂B/∂t]. It is important to point out, however, that by so doing one may be overlooking something of fundamental physical significance."

M. Mason and W. Weaver[2]

Introduction

A perennial subject for discussion in electrical engineering is the generation of an electromotive force by cutting of flux lines or by a time-varying magnetic field. Practical equations for the calculation of the generated emf are

$$V = Blv, \tag{1}$$

$$V = -\int \frac{\partial \mathbf{B}}{\partial t} \cdot d\mathfrak{A}, \tag{2}$$

$$V = -\frac{\partial}{\partial t}\int \mathbf{B} \cdot d\mathfrak{A}. \tag{3}$$

The first equation expresses the voltage generated in a conductor of length l, cutting normally through a magnetic field **B**. The velocity of the conductor is v with respect to the reference frame in which **B** is measured. Equations (2) and (3) indicate the emf produced by a time-variation of magnetic flux. If the contour that bounds the area is fixed, Equations (2) and (3) become identical and $V = -\partial\Phi/\partial t$. But in the general case where the contour changes with time, the two equations are distinct and must be considered separately.

Discussion usually centers about two questions:

(a) Are Equations (1) and (2) really independent, or can one be derived from the other?

(b) Which equation is the more fundamental?

Since Equation (2) is derivable directly from one of Maxwell's equations, and since Maxwell's equations are usually considered infallible, Equation (2) is often regarded as basic, with Equation (1) as a special case. On the other hand, consideration of the homopolar generator has led several investigators to the conclusion that Equation (1) is fundamental and that Maxwell's equations are incomplete.

The subject has been discussed ever since the time of Faraday. For instance, an extensive study was made by Lecher[3] in 1895. Some paradoxes were presented by Hering[4] in 1908. Blondel[5] and others argued about the subject in 1915. Another discussion occurred in the *Journal of the Institution of Electrical Engineers*[6] in 1936. Cohn, Bewley, and Slepian[7] exchanged some rapier thrusts in *Electrical Engineering*, 1949 and 1950. Various other studies have been made by physicists.[8] In each case, interest seems to rise anew to a sharp peak, after which it gradually declines, leaving the subject much as it was before.

The violence of the controversies and the complete lack of agreement, at the end as well as at the beginning, indicate that the usual treatments of electromagnetic induction must be far from satisfactory. The purpose of the present paper is to show that all ambiguities disappear if we abandon the concept of the magnetic field and handle the entire subject on the basis of inter-particle forces.[9]

Customary Theory

More fundamental than Equations (1) to (3) are the underlying vector point-relations. The basic relation for flux-cutting is

$$\mathbf{E} = \mathbf{v} \times \mathbf{B} \tag{4}$$

where **E** is the electric field strength produced by the motion of a charged particle whose velocity is **v** with respect to the magnetic field. From Equation (4),

$$V = \int_0^l \mathbf{E} \cdot d\mathbf{s} = \int_0^l \mathbf{v} \times \mathbf{B} \cdot d\mathbf{s}. \tag{5}$$

If **v**, **B**, and $d\mathbf{s}$ are mutually orthogonal, Equation (5) reduces to Equation (1).

Equation (2) comes directly from Maxwell's equation,

$$\text{curl } \mathbf{E} = -\frac{\partial \mathbf{B}}{\partial t}. \tag{6}$$

Integrating both sides over an area $a(t)$ whose boundary $L(t)$ may vary with time, we obtain at any instant,

$$\int \text{curl } \mathbf{E} \cdot d\mathfrak{A} = -\int \frac{\partial \mathbf{B}}{\partial t} \cdot d\mathfrak{A}.$$

By Stokes' theorem,

$$\int \text{curl } \mathbf{E} \cdot d\mathfrak{A} = \oint \mathbf{E} \cdot d\mathbf{s} = V,$$

which gives Equation (2). So Maxwell's equations lead to Equation (2), not to Equation (3).

Now consider Equation (3). If the contour depends on time,[10]

$$V = -\frac{\partial}{\partial t}\int \mathbf{B} \cdot d\mathfrak{A} = -\int \frac{\partial \mathbf{B}}{\partial t} \cdot d\mathfrak{A} + \oint \mathbf{v}_L \times \mathbf{B} \cdot d\mathbf{s}, \tag{7}$$

where $\mathbf{v}_L$ is the velocity of the element $d\mathbf{s}$ of the contour. Thus the generated emf may be considered as made of two components; one produced by the time-variation of **B** over area a, the other produced by the motion of the contour L. Note that L is arbitrary: it is merely a path of integration which we have chosen. It may represent a material wire or it may be an imaginary path in space.

Still another equation—advocated by Cohn,[7] Kraus,[11] and others—is

$$V = -\int \frac{\partial \mathbf{B}}{\partial t} \cdot d\mathfrak{A} + \oint \mathbf{v}_m \times \mathbf{B} \cdot d\mathbf{s}. \tag{8}$$

Here the velocity $\mathbf{v}_L$ of the arbitrary contour has been replaced by $\mathbf{v}_M$, the velocity of moving matter. Equation (8) seems to give correct answers, but it is purely *ad hoc* and violates Maxwell's Equation (6).

Attempts have been made also to apply Einstein's special theory of relativity. This theory applies to two observers in uniform rectilinear motion, the only means of communication between the two being light signals. Evidently, the peculiar conditions postulated in special relativity are not ordinarily encountered in induced-emf experiments. Generally the rotor of a generator is not in unaccelerated translation with respect to the stator. And the connection between moving and stationary systems is of a more material nature than that effected by light signals. One concludes[12] that relativity has no relevance in the

New Energy Times Archive

general subject of electromagnetic induction.

The New Electrodynamics

The pre-Maxwellian approach to electrodynamics is based on an extension of Coulomb's equation. A revival of these ideas[9] replaces the four equations of Maxwell by a single equation of utmost generality:

$$\mathbf{F}/Q_2 = \mathbf{a}_r \frac{Q_1}{4\pi\epsilon r^2}\left(\frac{v}{c}\right)^2\left[1 - \frac{3}{2}\cos^2\theta\right] - \mathbf{a}_v \frac{Q_1}{4\pi\epsilon c^2 r}\frac{d}{dt}v(t - r/c) - \mathbf{a}_r \frac{1}{4\pi\epsilon}\frac{\partial}{\partial r}\left[\frac{1}{r}Q_1(t - r/c)\right]. \quad (9)$$

Equation (9) expresses the force on charge Q_2, produced by Q_1 (Figure 1). The relative velocity of Q_1, with respect to Q_2, is **v**. In electromagnetic induction, the third term is zero and the distances are usually small enough so that retardation can be neglected. Then Equation (9) becomes

$$\mathfrak{F}_2 = \mathbf{F}/Q_2 = \mathbf{a}_r \frac{Q_1}{4\pi\epsilon r^2}\left(\frac{v}{c}\right)^2\left[1 - \frac{3}{2}\cos^2\theta\right] - \mathbf{a}_v \frac{Q_1}{4\pi\epsilon c^2 r}\frac{dv}{dt}. \quad (9a)$$

According to Equation (9*a*), the induced electric field strength at any point is produced by two distinct causes. The first term of the equation represents the effect of *velocity* of charges; the second term represents the effect of *acceleration* of charges. The flux-cutting emf is given by the first term, while the transformer emf is given by the second term. Equation (9*a*) offers definite answers to the questions of the Introduction. The answer to Question (a) is that Equation (1) cannot be derived from Equation (2) nor can Equation (2) be derived from Equation (1). The two phenomena are separate and distinct. On this basis, Question (b) is meaningless.

In the following sections, we shall consider five simple examples of electromagnetic induction. Each case is handled by the usual methods, and these results are compared with the unambiguous results of the new electrodynamics.

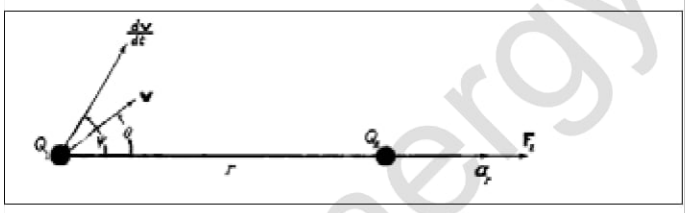

Figure 1. The new electrodynamics is based on the force between two charges Q_1 and Q_2 with relative velocity **v** and acceleration dv/dt.

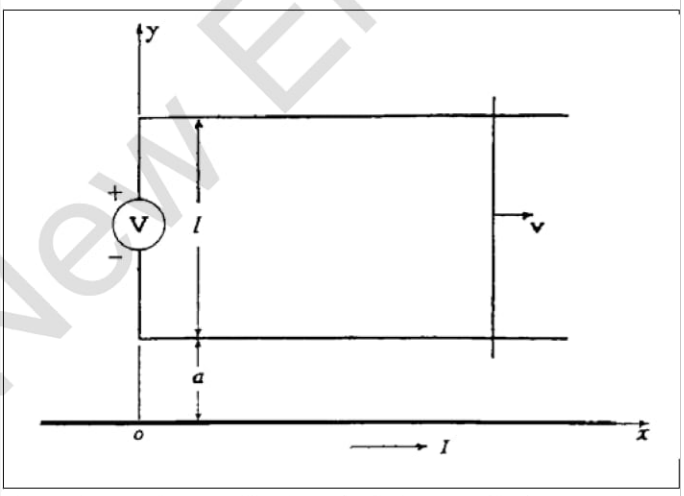

Figure 2. Simple d-c generator. The vertical wire moves at uniform velocity **v** through a magnetic field produced by the current I in a long wire.

First Example

Consider a conductor sliding at uniform velocity **v** through the magnetic field produced by a steady current I (Figure 2). The current is in a long, straight conductor on the x-axis. An electrostatic voltmeter V indicates the generated voltage.

The magnetic flux density at a point where $y > 0$ is

$$\mathbf{B} = \mathbf{a}_z \frac{I}{2\pi\epsilon c^2 y}. \quad (10)$$

On the basis of flux-cutting,

$$\mathbf{E} = \mathbf{v} \times \mathbf{B} = -\mathbf{a}_y \frac{Iv}{2\pi\epsilon c^2 y}. \quad (11)$$

Thus the generated emf, in accordance with Equation (1), is

$$V = \int_a^{a+l} \mathbf{E}\cdot d\mathbf{s} = -\frac{Iv}{2\pi\epsilon c^2}\int_a^{a+l}\frac{dy}{y} = -\frac{Iv}{2\pi\epsilon c^2}\ln\left(\frac{a+l}{a}\right) \quad (12)$$

where the direction of V is indicated by the + and - signs of Figure 2.

Starting with Maxwell's Equation (6) or with Equation (2), we obtain the definite result:

$$V = 0,$$

since **B** = const. Thus the prediction of Equation (2) is not in accord with experiment. Equation (3) or its equivalent, Equation (7), gives the sum of the previous values, or

$$V = -\frac{Iv}{2\pi\epsilon c^2}\ln\left(\frac{a+l}{a}\right). \quad (12)$$

Thus Equations (1) and (3) give the correct result for this example, while Equation (2) leads to an incorrect prediction.

Now consider Figure 2 from the viewpoint of the new electrodynamics. At any point P (Figure 3), we place a test charge Q_2 which moves at constant velocity $\mathbf{v}_2$ in the positive x-direction. Since there is no acceleration, the second term of Equation (9*a*) is zero. The current in the wire is

$$|I_1| = N_1 A_1 |Q_e| v_1$$

where

N_1 = number of free electrons per cubic meter,
A_1 = cross-sectional area of wire (m^2),
$|Q_e|$ = value of electronic charge (coulomb),
v_1 = drift velocity of electrons (in sec^{-1}).

The field strength at P, caused by current in element $d\mathbf{s}_1$, is the sum of the effects of positive and negative charges in $d\mathbf{s}_1$. The positive charge is

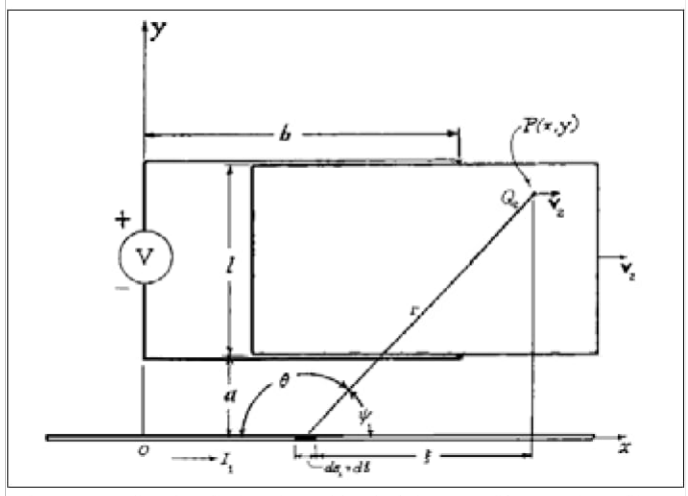

Figure 3. An electric field is produced at $P(x,y)$ because of the relative motion of the test charge Q_2 and the charges in the current element $I_1 ds_1$.

New Energy Times Archive

$$dQ_+ = +N_1A_1|Q_e|ds_1.$$

and its velocity, with respect to Q_2, is $-\mathbf{v}_2$. Thus Equation (9*a*), with $\theta = \pi - \psi$, yields

$$d\mathfrak{F}_+ = \mathbf{a}_r \frac{N_1A_1|Q_e|d\xi}{4\pi\epsilon c^2 r^2} v_2^2 \left[1 - \frac{3}{2}\cos^2\psi\right].$$

Similarly for the negative charges in the wire,

$$d\mathfrak{F}_- = -\mathbf{a}_r \frac{N_1A_1|Q_e|d\xi}{4\pi\epsilon c^2 r^2} (v_1 + v_2)^2 \left[1 - \frac{3}{2}\cos^2\psi\right].$$

Therefore, with $v_1 \ll v_2$,

$$d\mathfrak{F} \cong -\mathbf{a}_r \frac{|I_1|v_2}{2\pi\epsilon c^2 r^2}\left[1 - \frac{3}{2}\cos^2\psi\right]d\xi. \tag{13}$$

Equation (13) expresses the force per unit charge at any point P, caused by the current element $I_1 d\mathbf{s}_1$. For an infinite wire along the x-axis (Figure 3),

$$\mathfrak{F} = -\mathbf{a}_y \frac{|I_1|v_2}{2\pi\epsilon c^2}\int_{-\infty}^{\infty}\left[1 - \frac{3}{2}\cos^2\psi\right]\frac{\sin\psi\, d\xi}{r^2}$$

$$= -\mathbf{a}_y \frac{|I_1|v_2}{2\pi\epsilon c^2 y}. \tag{14}$$

The total generated emf read by voltmeter V (Figure 2) is

$$V = -\frac{|I_1|v_2}{2\pi\epsilon c^2}\int_a^{a+l}\frac{dy}{y} = -\frac{|I_1|v_2}{2\pi\epsilon c^2}\ln\left(\frac{a+l}{a}\right), \tag{12}$$

which agrees with the result obtained by use of Equations (1) and (3).

Equation (12) was obtained by neglecting the drift velocity $\mathbf{v}_1$ of the electrons in comparison with the translational velocity $\mathbf{v}_2$ of the wire. The result is always valid: even in the unusual case that $\mathbf{v}_2 < \mathbf{v}_1$, the effect of $\mathbf{v}_1$ cancels around the complete circuit.

Second Example

Now replace the wire by a metal plate (Figure 4) that moves to the right at uniform velocity $\mathbf{v}$. On the basis of Equation (1), it is not quite clear how one convinces himself that a moving plate is identical with a moving wire. This identification seems particularly troublesome if the plate is replaced by a continuous band or by a cylinder, where the entire apparatus appears the same irrespective of movement. Assuming such an identity, however, one obtains from Equation (1) exactly the same emf as was obtained for the wire of Figure 2. This result, of course, agrees with experiment.

Starting with Maxwell's equation, however, one may integrate over *any fixed area* such as that enclosed by the dotted line *ABC* and the wire *CDEA*, Figure 4.

The result is

$$V = -\frac{d\Phi}{dt}. \tag{15}$$

Because the arbitrarily chosen boundary is fixed, Equations (2), (3), and (15) are identical and all of them predict zero emf. Considerable effort has been expended by various writers in developing *ad hoc* restrictions and ammendations,[13] the purpose of which was to obtain the correct result from Equation (2) or (3). But none of the suggested changes seems very convincing.

On the other hand, the new electrodynamics shows that every electron in the plate experiences a force in the positive y-direction, producing a difference in potential between the edge $y = a$ and the edge $y = a + l$. The force on the electrons causes a redistribution of charge, with equipotentials y = const completely across the plate. There are no eddy currents. An electrostatic voltmeter connected anywhere between top and bottom edges will read the voltage given by Equation (12), irrespective of whether the contacts are opposite each other or not.

Third Example

We now consider an arrangement similar to that of Figure 2 but with alternating current:

$$I(t) = I_0 \cos \omega t.$$

A periodic motion is given to the sliding wire (Figure 5) so that

$$x(t) = \frac{v_0}{\omega}\sin\omega t$$

or

$$v(t) = v_0 \cos \omega t.$$

As in Section 4,

$$\mathbf{B}(t) = \mathbf{a}_z \frac{I(t)}{2\pi\epsilon c^2 y}$$

and, if we accept Equation (1),

$$\mathbf{E}(t) = \mathbf{v}(t) \times \mathbf{B}(t)$$

$$= -\mathbf{a}_y \frac{I_0 v_0}{2\pi\epsilon c^2 y}\cos^2\omega t.$$

Thus the generated emf is

$$V(t) = -\frac{I_0 v_0}{2\pi\epsilon c^2}\ln\left(\frac{a+l}{a}\right)\cos^2\omega t, \tag{16}$$

which does not agree with experiment.

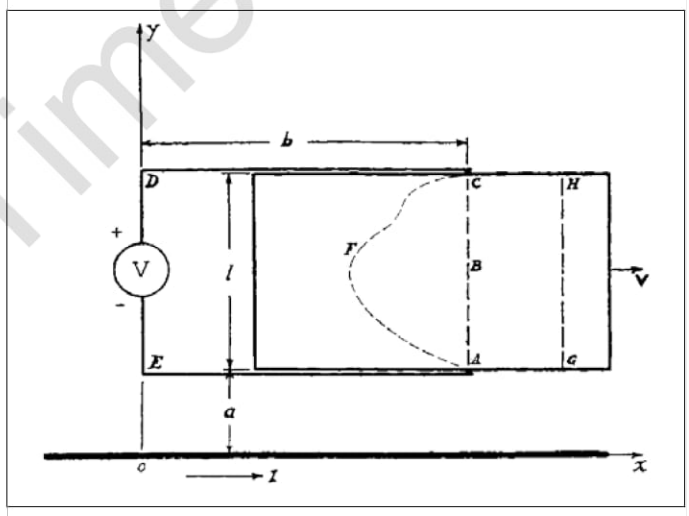

Figure 4. Unipolar generator. The electrostatic voltmeter V indicates the emf produced by motion of the metal plate.

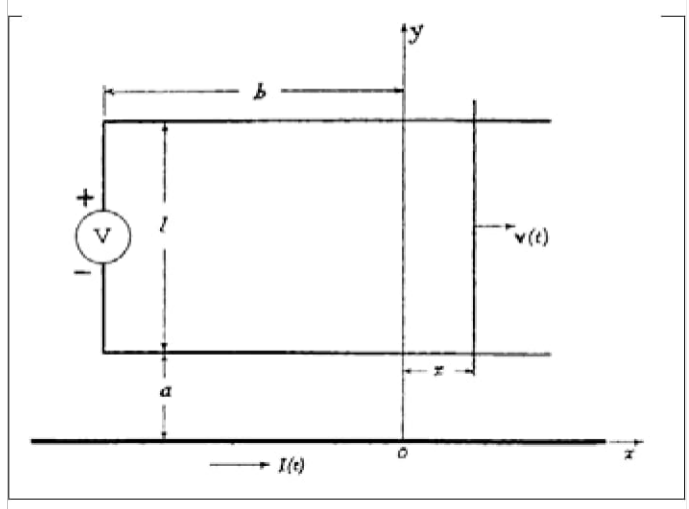

Figure 5. 0scillating wire in an alternating magnetic field caused by a.c. in the horizontal wire.

New Energy Times Archive

Turning now to Equation (2), we obtain

$$V(t) = -\int_{-b}^{x}\int_{a}^{a+l}\frac{\partial B}{\partial t}\,dy\,dx.$$

But

$$\frac{\partial B}{\partial t} = -\frac{I_0\omega\,\sin\,\omega t}{2\pi\epsilon c^2 y},$$

so

$$V(t) = \frac{I_0\omega\sin\omega t}{2\pi\epsilon c^2}\ln\left(\frac{a+l}{a}\right)\int_{-b}^{x}dx$$

$$= \frac{I_0}{2\pi\epsilon c^2}\ln\left(\frac{a+l}{a}\right)[v_0\sin^2\omega t + b\omega\sin\omega t]. \quad (17)$$

Like Equation (16), Equation (17) contains a d-c. component, which is certainly not found experimentally.

According to Equations (3) and (7), the generated emf is the sum of Equations (16) and (17), or

$$V(t) = -\frac{I_0}{2\pi\epsilon c^2}\ln\left(\frac{a+l}{a}\right)[v_0\cos 2\omega t - b\omega\sin\omega t]. \quad (18)$$

Or Equation (15) may be employed. The total flux is

$$\Phi = \int_{-b}^{x}\int_{a}^{a+l}B\,dy\,dx = \frac{I_0\cos\omega t}{2\pi\epsilon c^2}\int_{a}^{a+l}\frac{dy}{y}\int_{-b}^{x}dx$$

$$= \frac{I_0}{2\pi\epsilon c^2}\ln\left(\frac{a+l}{a}\right)\left[\frac{v_0}{\omega}\sin\omega t\cos\omega t + b\cos\omega t\right].$$

Thus, from Equation (15),

$$V(t) = -\frac{d\Phi}{dt} = -\frac{I_0}{2\pi\epsilon c^2}\ln\left(\frac{a+l}{a}\right)$$

$$[v_0\cos 2\omega t - b\omega\sin\omega t]. \quad (18)$$

Now consider the problem on the basis of the new electrodynamics. Since both velocity and acceleration are involved, the first and second terms of Equation (9) are required. The velocity term is exactly as in Equation (14) except that I_1 and v_2 are now functions of time:

$$\mathfrak{F}(t) = -\mathbf{a}_y\frac{I_1(t)\cdot v_2(t)}{2\pi\epsilon c^2 y}.$$

Thus the first term of Equation (9) yields an emf,

$$V(t) = -\frac{I_0 v_0}{2\pi\epsilon c^2}\ln\left(\frac{a+l}{a}\right)\cdot\cos^2\omega t. \quad (19)$$

The acceleration term gives

$$\mathfrak{F} = -\mathbf{a}_a\frac{Q_1}{4\pi\epsilon c^2 r}\frac{dv}{dt}.$$

For the positive charges in the conductor element $d\xi$,

$$dQ_+ = N_1A_1|Q_e|d\xi, \qquad v = -v_2, \qquad \text{and}$$

$$d\mathfrak{F}_+ = -\mathbf{a}_a\frac{N_1A_1|Q_e|d\xi}{4\pi\epsilon c^2 r}\left(-\frac{dv_2}{dt}\right).$$

For the negative charges in $d\xi$, $v = -(v_2 - v_1)$ and

$$d\mathfrak{F}_- = +\mathbf{a}_a\frac{N_1A_1|Q_e|d\xi}{4\pi\epsilon c^2 r}\left(-\frac{d}{dt}[v_2 + v_1]\right).$$

Thus,

$$d\mathfrak{F} = -\mathbf{a}_a\frac{N_1A_1|Q_e|d\xi}{4\pi\epsilon c^2 r}\frac{dv_1}{dt}.$$

But

so the fie

$$\frac{dI_1}{dt} = N_1A_1|Q_e|\frac{dv_1}{dt} = -I_0\omega\sin\omega t,$$

The field produced by the entire conductor is

$$d\mathfrak{F} = \mathbf{a}_a\frac{I_0\omega\,d\xi}{4\pi\epsilon c^2 r}\sin\omega t.$$

Since $\mathbf{a}_a$ is only in the horizontal

$$\mathfrak{F} = \mathbf{a}_a\frac{I_0\omega\sin\omega t}{4\pi\epsilon c^2}\int_{-\infty}^{\infty}\frac{d\xi}{(\xi^2+y^2)^{1/2}}$$

$$V(t) = [b + x(t)][\mathfrak{F}(t)_{y=a} - \mathfrak{F}(t)_{y=l-a}]$$

$$= \frac{I_0\omega\sin\omega t}{4\pi\epsilon c^2}\left[b + \frac{v_0}{\omega}\sin\omega t\right]\left\{\int_{-\infty}^{\infty}\frac{d\xi}{(\xi^2+a^2)^{1/2}}\right.$$

$$\left. - \int_{-\infty}^{\infty}\frac{d\xi}{(\xi^2+(a+l)^2)^{1/2}}\right\} \quad (20)$$

$$= \frac{I_0}{2\pi\epsilon c^2}\ln\left(\frac{a+l}{a}\right)[v_0\sin^2\omega t + b\omega\sin\omega t].$$

$$V(t) = -\frac{I_0}{2\pi\epsilon c^2}\ln\left(\frac{a+l}{a}\right) \quad (18)$$

$$[v_0\cos 2\omega t - b\omega\sin\omega t],$$

which agrees with Equations (2) and (3).

The moving wire of the **Third Example** is replaced by a moving plate:

$$v(t) = v_0\cos\omega t,$$

$$\mathbf{B}(t) = \mathbf{a}_z\frac{I_0\cos\omega t}{2\pi\epsilon c^2 y},$$

$$v(t) = v_0\cos\omega t,$$

Then, according to Equation (1), the generated emf is the **xample**, or

$$V(t) = -\frac{I_0 v_0}{2\pi\epsilon c^2}\ln\left(\frac{a+l}{a}\right)\cos^2\omega t. \quad (16)$$

Using Equation (9), we have

$$V(t) = -\frac{I_0 v_0}{2\pi\epsilon c^2}\ln\left(\frac{a+l}{a}\right)\cos^2\omega t.$$

and

$$\frac{\partial B}{\partial t} = -\frac{I_0\omega\sin\omega t}{2\pi\epsilon c^2 y}$$

$$V(t) = \frac{I_0 b\omega}{2\pi\epsilon c^2}\ln\left(\frac{a+l}{a}\right)\sin\omega t. \quad (21)$$

Since the b also gives Equation (21). ect, so all the classical r

The new electrodynamics, on the other hand, gives exactly the same result for the moving plate as for the moving wire. In either case, the generated emf is expressed by Equation (18), assuming that the horizontal wires to the voltmeter are spaced by distance l. In the more general case where the spacing is not l, the coefficient of the single frequency term will be altered, as it should be.

Fifth Example

If there is a time-variation of flux and no relative motion between circuits, we have the case of pure transformer action, and Equation (2) applies without question. Some writers have attempted to explain this case as an example of flux-cutting, the assumption being that the flux originates in the primary conductor and spreads out into space, cutting the secondary conductors and thus inducing an emf. That such an explanation is

New Energy Times Archive

assumption being that the flux originates in the primary conductor and spreads out into space, cutting the secondary conductors and thus inducing an emf. That such an explanation is untenable is seen by visualizing a toroid with two windings. Here the flux remains in the core at all times and certainly does not cut the conductors. Thus for fixed circuits, Equations (2) and (3) apply and Equation (1) does not.

Since there is no relative motion between circuits, the first term of Equation (9*a*) is zero and only the acceleration term applies. As shown previously,[9] the mutual inductances and induced emfs in fixed circuits, obtained by the new electrodynamics, are identical with those calculated by classical methods.

Conclusions

The results of our five examples are tabulated as follows:

Example	Flux-cutting, Eq. 1	Maxwell, Eq. 2	Moving boundary, Eq. 3	New electrodynamics, Eq. 9a
I	•	×	•	•
II	•	×	×	•
III	×	×	•	•
IV	×	×	×	•
V	×	•	•	•

A dot indicates a correct answer; a cross indicates an incorrect one. The classical equations sometimes yield the correct result, sometimes not. Even Equation (3), according to our interpretation, gives a false prediction for the homopolar generator, though in three other examples it happens to be correct.

The table indicates the uncertainty of the classical theory of electromagnetic induction. Knowing the experimental result, any engineer can find the particular equation that gives him the correct answer. And he can always think of a plausible reason for using this equation and not another. But such a procedure is a treacherous basis for exploring the unknown. The new electrodynamics, on the other hand, has given the correct result, without ambiguity, in all problems to which it has been applied.

References

1. Tate, J.T. 1922. "Unipolar Induction," *Nat. Res. Council Bulletin*, **4**, 24, 75.

2. Mason, M. and Weaver, W. 1929. *The Electromagnetic Field*, Chicago, University of Chicago Press, p. 257.

3. Lecher, E. 1895. "Eine Studie uber unipolare Induction," *Ann. d. Phys.*, **54**, p. 276.

4. Hering, C. 1908. "An Imperfection in the Usual Statement of the Fundamental Law of Electromagnetic Induction," *A.I.E.E. Trans*, **27**, p. 1341; 1908, "A New Factor in Induction: The 'Loop' vs. the 'Cutting of Lines of Force' Laws," *El. Wld.* **5,** 1, p. 559; 1921, "Revision of Some of the Electromagnetic Laws," *Jour. Franklin Inst.*, **192,** p. 599; 1923, "Electromagnetic Forces: A Search for More Rational Fundamentals," *A.I.E.E. Trans.*, **42**, p. 311.

5. Blondel, A. 1915. "The Laws of Induction," *Electrician*, **75**, p. 344. Discussion: *ibid.*, pp. 559, 634, 671, 711, 815, 855, 890, 927, 965; **76**, p. 169.

6. Cramp, W. and Norgorve, E.H. 1936. "Some Investigations on the Axial Spin of a Magnet and on the Laws of Electromagnetic Induction," *J. Inst. Elec. Engrs.*, **78**, p. 481; 1936, Discussion: **79**, p. 344.

7. Cohn, G.I. 1949. "Electromagnetic Induction," *El. Eng.*, **68**, p. 441; Discussion: *ibid.*, pp. 645 ,678, 762, 878, 985, 1080, 1113; **69**, pp. 187, 481, 1025, 1088, 1138; **70**, pp. 67, 161, 255, 352, 451; Slepian, J. 1951. "Line of Force in Electric and Magnetic Fields," *Am. J. Phys.*, **19**, p. 87.

8. Poincaré, H. 1900. "Sur l'induction unipolaire," *L'Eclairage Electrique*, **23**, p. 41; Barnett, S.J. 1912. "On Electromagnetic Induction Relative Motion," *Phys. Rev.*, **35**, p. 323; 1919, "A Report on Electromagnetic Induction," *A.I.E.E. Trans.*, **38**, p. 1495; 1922, "Electric Fields Due to the Motion of Constant Electromagnetic Systems,"*Phil. Mag.*, **44**, p. 1112; Pegram, G.B. 1917. "Unipolar Induction and Electron Theory," *Phys. Rev.*, **10,** p. 591; Cullwick, E.G. 1939. "An Experiment on Electromagnetic Induction by Linear Motion,"*J. Inst. Elec. Engrs.*, **88,** p. 315.

9. Moon, P. and Spencer, D.E. 1954. "A New Electrodynamics," *Jour. Franklin Inst.*, **257**, p. 369; 1954, "Electromagnetism without Magnetism: An Historical Sketch," *Am. J. Phys.*, **22**, p. 120.

10. See, for instance, Becker, R. 1944. *Theorie Der Elektrizitat*, Leipzig, B. G. Teubner, Vol. 1, p. 39.

11. Kraus, J.D. 1953. *Electromagnetics*, New York, McGraw-Hill Book Co., p. 292.

12. Moon, P. and Spencer, D.E. To be published, "Unipolar Induction

Moon continued from page 12

> tried to explain Ehrenhaft's phenomena by orthodox theory. We didn't succeed. We were not converted either—we simply believed that a better and more sophisticated approach would do the trick. (pp. 66-67)

Perhaps I could have ended this quote right after the mention of Galileo's opponents, for Galileo is the patron saint of almost everyone who is convinced that he is right and the Establishment is wrong. Yet the key to the difficulty in getting electromagnetism on a sound footing lies in the last sentence, for what Feyerabend is saying is that he and his friends, when push came to shove, decided not to believe either their own eyes or their own abilities. Rather, faith replaced experiment—faith that some "more sophisticated approach would do the trick."

So in electromagnetism we have problems, particularly with Maxwell's equations or, as Feynman says, "the *ideas* of Maxwell's theory." Yet the problems are not of the kind to show up easily; they are not of the kind to be detected in ordinary electrical and electronics work. And when the inconsistencies are pointed out, the default belief on the part of most of those who will at least look at the problems is that the difficulties will be resolvable in a way that will save Maxwell's equations.

Again, recognizing that there is a problem is the first step on the way to resolving it. I hope that with the republication of this paper by Moon and Spencer, we can not only make researchers aware of the problems, but perhaps even break the cycle of awareness followed by gradual decline of interest. Indeed, it is time these problems were brought to the front and kept there until resolved.

Also in "Spencer's Comments," we read that Parry Moon came to MIT and started working with Vannevar Bush on an experiment to disprove relativity. Vannevar Bush would go on to become one of the true luminaries of the twentieth century. He headed up the Office of Scientific Research and Development during World War II, and it was through him that President Roosevelt was kept updated on our progress with the atomic bomb. I've read several of his books lately. One of the recurring themes Bush brings up I can best paraphrase this way: "The worst way to solve a problem is to have it worked on by people who already know all the answers."

The fundamental problems of electromagnetism will not be solved by those who already know the answers, nor by those with faith in unspecified sophisticated approaches. It will be solved by those of us who first realize that we don't know everything, and that no one else does either, no matter how venerated they may be.

Selected Works of Parry Moon and Domina Eberle Spencer

Books

Moon, P. 1936. *Scientific Basis of Illuminating Engineering*, McGraw-Hill.

Moon, P. and Spencer, D.E. 1948. *Lighting Design*, Addison-Wesley Press.

Moon, P. and Spencer, D.E. 1960. *Foundations of Electrodynamics*, D. Van Nostrand Co.

Moon, P. and Spencer, D.E. 1986. *Theory of Holors*, Cambridge University Press.

Articles

Moon, P. and Spencer, D.E. 1953. "Binary Stars and the Velocity of Light," *J. Opt. Soc. Am.*, **43**, 635-641.

Moon, P. and Spencer, D.E. 1954. "Electromagnetism Without Magnetism: An Historical Sketch," *American J. Physics*, **22**, 120-124.

Moon, P. and Spencer, D.E. 1954. "Interpretation of the Ampere Force," *J. Franklin Inst.*, **257**, 203-220.

Moon, P. and Spencer, D.E. 1954. "The Coulomb Force and the Ampere Force," *J. Franklin Inst.*, **257**, 305-315.

Moon, P. and Spencer, D.E. 1954. "A New Electrodynamics," *J. Franklin Inst.*, **257**, 369-382.

Moon references continue on page 70

New Energy Times Archive

The American Chemical Society Conference Cold Fusion Sessions

Jed Rothwell

The October 1999 Pacific Conference of the American Chemical Society (ACS) in Anaheim, California included three sessions on cold fusion. The first, on October 6, was titled *Novel Hydrogen Chemistry*. It was sponsored by Blacklight Power, Inc., chaired by Randell Mills, and devoted to theories and experiments centering around Mills' theories, including independent replications. The second and third sessions were on the morning and afternoon of October 8. They were titled *Electrochemistry/Anomalous Effects I* and *Electrochemistry/Anomalous Effects II*, both chaired by Melvin H. Miles.

I cannot review nuclear theory, which is over my head. I have no comments on the session about Mills, and I cannot say much about Szpak, R. Bush, or Chubb. In general, I think the quality of papers at cold fusion conferences is getting better and better. McKubre told me that the conference held in Asti, Italy a few weeks later was also excellent.

Martin Fleischmann,
"Cold Fusion: Past, Present, and Future"

This lecture lived up to its name. Fleischmann's knowledge of cold fusion, chemistry, and physics is breathtaking. His lectures are often difficult to follow, and you get a sense he enjoys making them even harder than they need to be, but this time he was in the mood to get the message across. The content of the lecture was similar to Fleischmann's ICCF-7 paper[1] of the same title, and his paper on Alfred Coehn.[2]

He began by reviewing the history of his own involvement in the field, which began in 1947 when he discovered a series of "brilliant" papers by Coehn on electromigration. Coehn bent a thin (100 micron) palladium wire into a zig-zag shape, then loaded the end of it with hydrogen. The hydrogen gradually began spreading out through the wire by diffusion. It was immersed in nonconducting fluid, and a current was passed through it, which causes electromigration: the current pushed hydrogen through the wire. The progress of hydrogen through the wire could be measured because the resistance of each zigzag segment of wire changed as the hydrogen reached it. Coehn found that hydrogen migrates more rapidly toward the negatively polarized end. This was confirmed by reversing the current flow, and seeing the movement of hydrogen shift the other way, toward the new negative pole. This means the hydrogen must be present in the lattice in the form of a "bare proton." Fleischmann determined that these protons are strongly bound to the lattice, in a "solvation energy hole" of at least 11.7 eV per proton, yet paradoxically they move readily through the lattice. They are close to large concentrations of electrons, yet they do not form hydrogen atoms. This behavior was unexpected and it has not been explained by conventional theory. These discoveries have been largely overlooked or swept under a rug, except by Fleischmann himself, because conventional physics cannot explain it, and conventional physicists will find this "an extremely uncomfortable experiment." He thinks the only way it can be explained is that, "the protons (or deuterons) are in a collective state described by Macroscopic Quantum Mechanics so that they can experience intense anharmonic excitations."

Protons are in a condition as a group that usually occurs one atom at a time, and this condition can only be explained by Quantum Field Theory. This state would be impossible to achieve according to conventional mechanics or Quantum Mechanics. Fleischmann says he should have realized this back in 1947, but he did not think of it until the end of the 1960s, when he was working on electrochemical isotopic separation of hydrogen and deuterium in palladium lattices. He found that the separation factor (the efficiency at which the isotopes were pulled apart from one another) was much higher than anticipated. "You could only explain the results if the deuterons and protons are part of a large quantum system."

Storms strongly disagrees with Fleischmann. He thinks electromigration has not been overlooked, it has no relationship to macroscopic quantum mechanics, and it cannot explain cold fusion. He says all ions dissolved in metal show the electromigration effect. "Palladium is unique only in that it dissolves hydrogen more readily. . .and the ions are more mobile."[3]

Fleischmann suspected that this extraordinary state might allow nuclear effects such as two or more deuterons fusing. He thought these events would be so rare they would be undetectable, so he did not attempt to test the hypothesis experimentally. The idea remained in the back of his mind for many years. In the early 1980s, he and Pons decided to try an actual experiment, and the rest is history. Fleischmann feels they may not have selected the optimum method at first. He wished they had tried a variety of other methods, especially electromigration, because electrochemistry is difficult and unreliable:

> There are two classes of scientists in the world: ones who think electrochemistry is really rather interesting—they are usually nonelectrochemists—and electrochemists who say "I will not touch electrochemistry, if I can do it some other way, I won't touch it." And the trick, of course, is to go to our first love, electrodiffusion, and say, "We'll do all this in the wire. We'll compress the deuterium by electrodiffusion and see what we get out of it."

McKubre agreed. He described SRI's replication of the Case gas loading experiment:

> The key element is, there is no electrolysis. Martin said it exactly right: the world is fascinated by electrochemistry, except electrochemists. If they can find another way of doing the job they will always choose the other way.

It is well known that cold fusion is difficult to replicate mainly because of differences in the quality of cathode material. Fleischmann listed two other reasons, which have not been as widely discussed: positive feedback, which distorts the calorimetry; and phase instability, which destroys the cathode.

"The key element is, there is no electrolysis. Martin [Fleischmann] said it exactly right: the world is fascinated by electrochemistry, except electrochemists. If they can find another way of doing the job they will always choose the other way."
—*Michael McKubre*

New Energy Times Archive

Positive feedback means that a pulse of joule heating will make an active cell ramp up excess heat, and the temperature will not relax; that is, it will not return to the base level it was at before the pulse. Heat promotes more heat. He showed an example of this from the Japanese NEDO program data, explaining: "I like using other people's results better than our own, because then at least you have some security that we haven't fiddled with the results." He was being ironic; the Japanese themselves tried to use this same data to show that Fleischmann's method of calorimetry is unreliable and his results are meaningless. At ICCF-7, Fleischmann described their mistake:

> We note that whereas "blank experiments" are always entirely normal. . .it is frequently impossible to find *any* measurement cycle for the PdD_2O system which shows such normal behavior. Of course in the absence of adequate "blank experiments" such abnormalities have been attributed to malfunctions of the calorimetry.[3]

Fleischmann recommends platinum in heavy water as the ideal combination for use in a "blank" cell, and he recommends calibrating before and after the experiment. Melvin Miles, Edmund Storms, and others say it is possible to calibrate with PdD_2O, but you have to do it within the first few days of the experiment, before measurable low-level cold fusion heat turns on and interferes. If the temperature does not relax after a pulse, and if the pulse shape does not conform to Newton's law of cooling, you are too late.

Fleischmann complained that, "people have not understood [positive feedback], although I have rammed it down their throats forever." He certainly has stated these things before, and shown lucid examples, yet people seem to ignore him, just as they ignore the materials issues that Storms has described so well on many occasions. People who try to do these experiments without first studying the literature, thinking, and planning invariably fail. It does not matter much that they waste their own time, but unfortunately they have also wasted vast amounts of the Japanese taxpayer's money, and they have published papers claiming that cold fusion does not exist.

"Instability" means that at a certain temperature and loading ratio the chemical loading reaction switches from being exothermic to endothermic. If you hold the cell on the borderline at which this occurs, you will see oscillations between exothermic and endothermic loading, and "these oscillations eventually destroy the system."

Despite the problems caused by positive feedback, it is a highly desirable characteristic, because it lets you control the cell and drive the temperature as high as you like.

Edmund K. Storms, "The Present Status of Chemically-Assisted Nuclear Reactions"

Storms began by saying, "The conflict between belief and observation has polarized science and interfered with the normal development of the field." He went on to make a number of other general observations, such as the fact that skeptics think irreproducibility means the effect does not exist. He takes the skeptics more seriously than I do. I assume they do not really mean these things, and they make these arguments only to confuse the public.

Storms thinks that cold fusion is a deuterium fusion reaction that occurs in a solid lattice where, "subtle reactions can take place which overcome the Coulomb barrier and dissipate the energy" from the fusion reaction, preventing penetrating radiation.

He listed the many modes of cold fusion that have been reported: palladium in heavy water, nickel in light water, proton conductors, glow discharge, gas loading into microscopic palladium particles, ultrasound loading, and even biological cold fusion. Most cold fusion scientists ignore these other claims. They consider light water nickel experiments an embarrassment, and cold fusion in biology beyond the pale. They hope these claims are false, because if they are true, they contradict, confuse, and somehow detract from the heavy water claims. People feel that nuclear fusion should require heavy water and other rare, expensive, and exotic materials. Scientists have been experimenting with ordinary materials like water and nickel for centuries without noticing any sign of nuclear fusion, whereas before 1989 few people experimented with palladium and heavy water. Other scientists do not want to talk about the teeming variety of experiments in this field, but Storms is happy with the apparent chaos. He finds it "reassuring" because "you wouldn't think that nature would make this happen under only one condition."

He is even happy with the seemingly chaotic rules that have been uncovered so far, such as the fact that nickel produces low level heat with light water but not heavy, and palladium produces concentrated heat with heavy water but not light, and they produce different reaction products. Storms explains, "If this were caused by delusion and error, you would expect the same reactions and products whether it is light water or heavy water." He asks, "Why should the cell care what the cathode is made of?" It cannot affect the calorimetry. He returned to this theme several times, pointing out the consistency of results from different laboratories, and the fact that errors would produce random results uncorrelated with experimental conditions. Palladium never works at low current density: "plate, rod cathode, isoperibolic, or flow calorimeter. . .the same pattern is seen in every study." Yet current density cannot affect calorimetry.

Storms reviewed some history and nonhistory: books written by skeptics claiming there is no experimental data, citing no papers. Storms has written periodic reviews of the field beginning in 1991 when there was already lots of peer-reviewed information available.

Power grows with charging. Everyone sees that, regardless of the calorimeter or the shape and size of the cathode. McKubre proved this with his famous graph of power versus composition. (See Storms' paper in this issue, p. 27, Figure 5.) Neutrons and tritium are detected but only helium is consistent and proportional to heat. Many studies show a relationship, but only Bush and Miles yield quantitative results. Storms recommends using different calorimeter and mass spectrometer types to bolster results.

The finely-divided palladium experiments include Arata and Case. Arata's helium correlation is not quantitative but it is proportional: the more heat he measures, the more helium he finds. (It is not quantitative because he does not know the absolute amount of helium and he cannot show how many electron volts of energy per atom of helium the reaction produces.)

During the question and answer period, McKubre asked Storms what he considers the most crucial experiments. Storms replied that we need to improve reproducibility. "You cannot do nuclear experiments or insightful experiments unless you can get the samples to produce the effects on a routine basis. That was the great frustration at the beginning. People set up elaborate experiments with great fanfare, and they got nothing, and of course they got bummed out and concluded it was not real." The second most important priority is to do experiments which are "uniquely capable of separating out the various theories. We need to focus down and diminish the playing field." He thinks there are about a dozen credible theories and "a hundred others which are fun intellectual games."

Michael McKubre, Francis Tanzella, and P. Tripoldi, "Anomalous Heat Production from Hydrogen Saturated Palladium"

McKubre discussed a wide range of experiments that have been performed at SRI. He made some of the most assertive positive statements I have heard from him:

> There has been so much work done, in such a variety of high quality calorimeters. We have logged more than

New Energy Times Archive

150,000 hours of calorimetry at SRI. The evidence, in my view, for the appearance of an anomalous, unaccounted excess heat in the deuterium-palladium system is essentially overwhelming.

There is something there. It is larger by more than one order of magnitude, in some cases by more than two orders of magnitude, than the sum total of all possible chemical reactions, so it causes us to seek another explanation for the excess heat production—other than chemistry.

He began, as he often does, with a review of the criteria needed to produce excess heat:

1) You must achieve and maintain an average D/Pd ratio significantly higher than 0.85.
2) You must achieve and maintain high cathodic current density.
3) You must maintain a flux of deuterons through the interface. This is not an equilibrium phenomenon; it is stimulated by departure from the steady state.

These three "somewhat conflicting criteria" are expressed in a detailed formula which he has often published.

McKubre feels that a theory is essential and that cold fusion will never be accepted without one:

> Complete and full acceptance, and certainly complete and full understanding, can never be achieved until we have a theory that is both obvious and accepted. My criterion of an obvious theory is one that I can understand.

I suppose that if a device can ever be easily reproduced the phenomenon will be accepted with or without a theory. High-temperature superconductivity has no theory, but everyone believes it is real because it has been widely and relatively easily reproduced.

> John Dash is one of the few cold fusion scientists who has a group, and who is happy to share his knowledge and bring young people into the field.

McKubre praised the helium detection experiments performed by Melvin Miles, saying they were seminal to the field and they prompted Ben Bush to come to SRI, where he successfully replicated Miles' experiments. McKubre summarized Bush's results: In no case was helium detected without heat. In three cases there was heat but no helium detected, presumably because the amounts were too small to be measured or the helium was trapped in the metal. In three other cases both excess heat and helium were observed. When helium was detected in the effluent gas during the experiment, the amount was about three-fourths of the amount that would be produced by a conventional 24 MeV D-D reaction. Additional tests showed that the remaining 25% (the "missing helium") was trapped in the palladium cathode near the surface. When the cathode was repeatedly heated and cooled, and the current was reversed (making it an anode), the remaining helium was gradually flushed out until the amount reached about 104% ± 10% of the expected value.

These results were described in the final 1998 EPRI report, but unfortunately that book costs $20,000 for non-members of EPRI. McKubre told me he hopes to publish some of these results soon in a more accessible form.

With this experiment it would be extremely difficult to produce helium at concentrations above ambient atmospheric concentration (measured at 5.24 ppm in the SRI lab). You would have to produce huge amounts of energy with high powered electrolysis in a sealed cell. To overcome this problem, they decided to look for other "simpler, cleverer ways" to look for helium. They found the Case experiment, in which deuterium gas is applied to palladium-carbon commercial catalyst materials. SRI collaborated with Les Case and Russ George to replicate this. They measured helium-4 online. To calculate heat, they used more sophisticated equations than Case himself did, although the basic technique was the same. They compared the active deuterium cell to a blank ordinary hydrogen cell. The blank cell never produces heat or helium. They have done this experiment sixteen times to date. The results fall into three groups:

1) No heat, no helium.

2) Significant, meaningful levels of heat are observed and helium increases, but it remains below atmospheric concentration, which leaves open the possibility that the helium is caused by a leak.

3) Heat and helium beyond the limits of contamination. This result has been seen five times. Helium does not appear for a while; the cell is stable. Then helium increases abruptly and continues to levels above atmospheric concentration, which means it cannot be contamination from outside the cell; a leak could only *reduce* helium concentration. Helium correlates closely with levels of excess heat. After a while helium production levels off, then stops, and sometimes the amount of helium drops a little. Apparently some of it is sequestered (trapped) in the carbon or palladium. The rate of appearance of helium strongly correlates to heat.

McKubre went on to describe their successful replication of excess heat with the Arata and Zhang double structured (DS) cathode. SRI recently finished a series of tests with two DS cathodes supplied to them by Arata and Zhang. One was run in heavy water, one in light water as a blank. SRI confirmed heat and helium production in the heavy water cell, and saw nothing with the blank. The cells were tested in SRI's high precision flow calorimeters, which are probably the best conventional calorimeters in the world. The cells were too big to be fully submerged in the constant temperature water bath, so accuracy was reduced somewhat, but it was still good. During the ninety-day run, the light water cell excess power level "wandered around" the zero level. The signal is noisy because input power is high, 100 to 200 watts input. The heavy water cell excess produced 10 to 12 watts of excess power. Not only was excess power measured absolutely (with flow calorimetry), but it was observed by comparing the two cells. The heavy water cell runs hotter than the light water cell at the same input power.

Excess power reached a maximum of 12% of input power, which is somewhat less than Arata himself reported. When input power was increased to the highest levels, excess actually declined. This might have been because maximum power was applied at the end of the experiment when the cathode seemed to be "wearing down, or running out" for some reason. I suppose this was because of contamination, not because a significant amount of nuclear fuel was consumed. In any case, I think the fact that input power does not correlate with excess heat is proof that the excess heat is not an artifact of the calorimetry.

S. Szpak and P.A. Mosier-Boss,
"Thermal and Nuclear Events in a Polarized Pd+D System and Overview of the Co-Deposition Technique"

Szpak was one of the first people to detect tritium. He found it in the liquid phase, not in the gas. Cells were run at low current density and tritium was sampled every twenty-four hours. Production was generally 10^4 atoms per second, but in some samples it reached as high as 10^8 times of tritium per second. Great care was taken to avoid errors. The closed cells were designed for tritium testing. Many crosschecks were made to be sure this really was tritium and not some other radioactive species, and to be sure the tritium was not preexisting.

Szpak later tried to address the question: Why is cold fusion

New Energy Times Archive

with thin films more reproducible than with solid rods? He believes it is because of the morphology; thin films saturate more quickly and completely. One in four thin film electrodes becomes active. Because we have no working nuclear theory, Szpak looks at cathode chemistry to find the best loading protocols, and diagnostic photos of the cathode surface which show nonuniform distribution of hydrogen or deuterium.

John Warner and John Dash,
"Electrolysis of Heavy Water with Titanium Cathodes: Heat Produced and Chemical Analysis of the Cathodes"

This paper was presented by John Dash, from the physics department at Portland State University, who is so professorial you would think he was sent by central casting. He described the latest work by John Warner, a graduate student who finished a Masters degree in this field. Warner is the sixth person to earn an advanced degree working in cold fusion at Portland State University. The first was Patrick Keefe in 1990. During his lecture, Dash often refers to "our group." He is one of the few cold fusion scientists who has a group, and who is happy to share his knowledge and bring young people into the field. He also brings in outside funding, thanks to his openness. This research was funded by the Drexler Foundation, the New York Community Trust, and the U.S. Army Research Office. This proves you can get funding for cold fusion, and you can attract young people if you act like a legitimate, modern scientist instead of a medieval alchemist.

Dash began with a brief review of work performed a few years ago and presented in the Kopecek masters thesis. A Ti-D (titanium deuterium, heavy water) active cell was compared to a control cell with Pt-H (platinum hydrogen, ordinary water). The Ti-D cell reached a higher temperature after five or ten minutes, even though input power was a half watt lower:

Ti-D	2.3 watts	44°C
Pt-H	2.8 watts	39°C

The latest work is an attempt to improve the reproducibility of excess heat with titanium.

An array of eight cells is embedded in a block of Styrofoam, wired in series, and run at the same time. The anodes are all Pt. Six cathodes are Ti in heavy water, one control cell has Pt in ordinary water, and one empty cell is used to monitor ambient temperature. The cells are as closely alike as they can be made. These are double-walled cells, like Miles'. In the outer wall (jacket) is a temperature sensor: a precision IC temperature transducer, in air. The cells are electrochemically closed, with a recombiner and a septum, to prevent an explosion in the event the recombiner catalyst fails.

In the six Ti-D cells, the cathode width is varied systematically, which gives different current density.

In one case, a 5°C temperature difference between the control and a live cell was observed during steady state operation, where the input power was the same to both cells within a few milliwatts.

Excess heat was produced by some deuterium cells but not by others. Experiment 3, Cell 3 produced heat:

Cathode mass:	11 mg
Current density:	1.92 A/cm^2 (such high current density is hard to maintain)
Cathode width:	1.93 mm
Runtime:	115 hours
Input power:	1.7 Watts
Excess heat observed:	0.21 ± 0.09 Watts, where 0.09 watts is 3 sigma
Excess heat percent:	12.07% ± 5.17%
New elements observed:	S, K, Ca, V, Cr, Fe, Ni, Cu

The only known energy-producing chemical reaction with these materials is the formation of Ti-D_2. The cathode weighs 11 mg, so this reaction would yield 22 joules. During a twenty-five hour steady state period, this cathode produced 19,000 joules of excess heat.

In cells which produced excess heat, the "new elements observed" were found on the cathode surface with an EDS (energy dispersive spectrometer) after electrolysis. These elements were not detected on the cathodes or in the electrolyte before electrolysis, except sulphur, in the electrolyte. The sulphur was probably not deposited electrolytically (galvanized) onto the electrode, because SO_4 is a negative ion. Dash thinks that, "a hot spot reacts chemically with the electrolyte to form a sulfur-containing compound." He noted the same thing with palladium cathodes.

After ultrasonic cleaning the new elements are still there. Ultrasonic cleaning will usually remove galvanized material, so these new elements are either very firmly attached, or they are transmutation products and were originally part of the titanium metal surface itself. The new elements are grouped together near characteristic places on the cathode surface, which were probably "hot spots" where heat was generated during the reaction. The EDS showed that other areas of cathode surface away from the hot spots were pure titanium, which means the ultrasonic cleaning probably did remove galvanized deposits.

The isotopes of the new elements have not been measured, which is a shame. I asked Dash why they have not done this. He said the new elements usually appear in micron diameter spots, and the SIMS mass spectrometer beam rasters over an area about one square millimeter. This is so much larger than the new element deposits, the instrument would see only the titanium. In their ICCF-7 paper, Klopfenstin and Dash reported small isotope shifts in titanium measured with ICP/MS, normalized with respect to titanium-50.[5] I checked titanium isotope ratios in two standard reference books and I found as much variation between the books as between the before-and-after readings reported by Dash.[6] I think a slight error measuring titanium-50 would be enough to account for the apparent isotope shift. However, Dash says analysis of a titanium standard after electrolysis did not show the isotope shifts.

Neutron Activation Analysis (NAA) of the cathodes has been performed at the Reed College Reactor, in Portland, Oregon. These are blind tests; the people operating the NAA spectrometer do not know whether the cathode produced excess heat or not. A cathode that produced excess heat showed 28 ppm ± 12 ppm chromium. Another cathode that did not produce heat had no measurable chromium, and neither did a blank, that is, an empty container which is used to hold samples. NAA also showed that the electrolyte from the cell which produced excess heat contained chromium, whereas there was no chromium in the electrolyte from the cell which did not produce excess heat. The new elements, other than chromium, are not easy to detect with NAA.

In Cells 5 and 6 current density was much lower than Cell 3, but the cathodes totally disintegrated for some unknown reason. The cathode material ended up as a slurry of titanium at the bottom of the cell. Cell 6 did produce excess heat, but Cell 5 did not.

Atomic Force Microscopy of palladium cathodes that produced excess heat shows materials inside the cathode vaporized and erupted out. Mizuno and Ohmori described the same phenomenon in *Nuclear Transmutation: The Reality of Cold Fusion.*[7]

In the first eight-cell experiment, two out of six Ti-D cells produced excess heat. Having established a viable method of testing multiple cells at one time, Dash felt the next step should be to improve reproducibility. From the conventional literature on catalysts, he learned that catalysts are improved by shock loading, that is, by introducing defects into the material. His group decided to do this with cold rolling: by squashing the cathode at room temperature under a roller and elongating it. They ran another eight-cell experiment with three pairs of cold rolled cathodes, which were deformed (reduced in thickness) by 20%,

New Energy Times Archive

35%, and 50%. The pair of 20% deformed cathodes both gave excess heat both at 0.40 watts. With 35% deformation, the two cathodes produced less heat, around 0.39 and 0.15 watts. With 50% deformation, one cathode produced ~0.20 watts and the other produced no heat. Beyond 50% there is no excess heat. In the first experiment with no deformation, two out of six cathodes produced heat. In the second experiment with cold rolling deformation, five out of six produced heat. Perhaps there is an optimum level of deformation, at around 10 or 20%.

At Ben Bush's suggestion, they are trying a Seebeck Envelope Calorimeter, with ± 22 mW accuracy. They have done two experiments. The first time they saw no excess, the second time they saw 100 mW. They are still learning how to optimize this new instrument. Learning to use a new calorimeter takes practice, and each type has different characteristics and quirks, often for mundane reasons. For example, you can see inside some calorimeters and cells, which means you can watch what electrolysis is doing, where the water line stands, and whether the recombiner is working. But most calorimeters are opaque, so you have to feel your way and learn what is happening by indirect means.

What is the origin of the unexpected "new elements?" They are probably not contaminants preexisting in the titanium or in the electrolyte. The radical explanation, that they are caused by transmutation, seems most likely for several reasons:

In light water control cells and heavy water samples which do not produce heat, the anomalous materials are not found. Dash's group purchases 99.9999% pure Ti, and they test it. If they find significant levels of impurities they do not use the sample. If the materials were preexisting they would be elongated (smeared out) in the direction of the cold rolling.

Some people have suggested that the materials are hidden in the bulk of the metal at first, and then driven to the surface during electrolysis by solid state diffusion. Dash thinks this is highly unlikely because the operating temperature is less than 100°C, which makes diffusion very slow. McKubre pointed out that the presence of hydrogen or deuterium will enhance the rate of diffusion. Dash responded, "It is difficult to account for localized concentrations of impurities by a solid state diffusion mechanism, even if this is enhanced by the presence of hydrogen or deuterium."[8] The NAA analysis sees all elements, even under the surface in the bulk of the metal. A sample of Ti was cut in half to make two cathodes. One produced heat and showed Cr, the other produced no heat and had no Cr. When McKubre heard this, he suggested they do an NAA analysis on the same sample, before and after electrolysis. Dash countered by pointing out that the NAA itself would interfere with this measurement, since it implants neutrons which transmute elements. "NAA itself causes transmutation, so it would be impossible to determine which new elements were produced by NAA and which were produced by electrolysis, if McKubre's suggestion were carried out."

Could the anomalous material come from electrodeposition of contaminants? (This is also called a passivating film, or informally, "galvanized garbage.") The major contaminants in the cell are sulfur from the electrolyte, platinum from the anode and recombiner, and Al_2O_3. As noted above, sulphur is found on the cathode, but platinum and aluminum, which are likely to be deposited, are seldom found. Also as noted, the ultrasonic cleaning probably removed galvanized deposits.

This is the first time anyone has ever attempted to move a cold fusion experiment, set it up again in front of a new audience of co-workers, and run it exactly the same way with the same materials. This is one of the most important experiments in the history of the field.

Robert T. Bush and M.R. McGovern, "Theoretical Considerations for 'Cold Fusion' Based upon Co-Production of Heat and Tritium"

This was mainly a discussion of Bush's theories. He briefly described two sets of experiments, the first performed in a calorimeter immersed in ice water near 0°C, the second at much warmer temperatures, around 40°C. Doing calorimetry in ice water seems unwise to me. Phase changes and condensation will play hob with accuracy. I have to admit though, he showed a calibration curve which looked remarkably linear. Bush selected ice water temperatures to investigate an aspect of his theory.

Melvin H. Miles, "Calorimeter Studies of Pd/D_2O+LiOD/Pt Electrolysis Cells"

Miles presented data from his work at the New Hydrogen Energy (NHE) Laboratory in Japan, performed during a five month appointment in 1997-98, just before that laboratory closed. He began his talk by saying this research was funded by the NHE, and the U.S. has not funded his work in cold fusion since 1995.

Miles said, "Let me acknowledge [the NHE support]. . .in fact, the people at China Lake wanted to make sure I pointed out that this was not funded by the Navy." McKubre called this "an anti-acknowledgment."

At the NHE, Miles worked with Fleischmann-Pons calorimeters and with his own calorimeters which he brought from China Lake. To do as many experiments as possible in only five months, he usually ran five tests at a time: two in his own cells and three in the Fleischmann-Pons cells. In this lecture he only had time to discuss one set of experiments, in which the China Lake calorimeters were run side-by-side electrically in series, with two palladium cathodes also used previously at China Lake: a good piece that produced excess heat, and a dud which produced no heat, as a control. The purpose of this experiment was to set up the same equipment in the same condition in a different laboratory, to see if the same results are obtained. It was a complete success. The dud cathode produced no excess, in a clean, predictable, high-precision blank experiment. The good cathode once again produced excess, usually ranging from 50 to 100 mW.

As far as I know, this is the first time anyone has ever attempted to move a cold fusion experiment, set it up again in front of a new audience of co-workers, and run it exactly the same way with the same materials. This is one of the most important experiments in the history of the field. The ability to recreate an experiment and revisit conditions is essential. It is not much fun for a scientist to repeat weeks of painstaking work without variation, but if scientists are not willing to do this, reproducibility will never be improved.

Miles began by cleaning up the cells and polishing the cathodes. He made a minor change to the calorimeters, replacing the water in the outer jacket with bundled up aluminum foil. This made the instruments more sensitive, with a larger temperature difference per watt, but it also made them more susceptible to errors induced by changing electrolyte levels. The cells are opaque, so he measures the electrolyte level to the nearest 0.5 cm with a syringe. The absolute accuracy of the calorimeter is 20 mW, but he can easily measure relative changes as small as 5 mW.

During the tests in Japan, there were seven episodes in which the temperature went up when it should have gone down or

New Energy Times Archive

remained steady. The control cell always dropped in temperature as power was reduced. In one example, power to both Cells A and B was falling; control Cell B temperature fell normally as expected. Cell A power was decreasing even faster than B, yet the Cell A temperature climbed. This behavior is impossible unless there is excess heat in Cell A. Even if you do not trust the calibration curves and equations used to derive the absolute value of the excess power, you cannot deny that this simple side-by-side comparison proves there was significant excess heat.

Each cell is equipped with two thermocouples, one high and one low, that measure the temperature in the jacket just outside the cell walls. The thermocouples are nestled in the bundled up aluminum foil. They were placed at slightly different distances from the cell wall, so the temperatures they registered were a fraction of a degree apart. However, they tracked one another perfectly. "Every blip on one showed up on the other." There was, however, one brief incident in which the readings diverged. During the first days of a heat burst, the lower thermocouple in the active cell occasionally jumped up several degrees for one reading, and then fell back to the previous temperature. The readings were made a half minute apart, and it is thermodynamically impossible for the temperature to fall that quickly. The cell could not cool that fast, and there could not be such a large temperature difference between the two thermocouple locations. The Japanese scientists at the NHE did everything they could to find a problem with the thermocouple, but they found nothing. Therefore, Miles surmised, these readings were caused by electronic noise, perhaps induced by X-rays or some other radiation. The higher thermocouple did not change, probably because the anode sheltered it from the cathode. There was a direct path from the cathode past the loops of the coiled anode, through the wall of the cell, to the lower thermocouple. When he returned to China Lake, he exposed thermocouples to radiation and saw the same kind of transient changes.

Miles saw the same thing Fleischmann described: after a heat pulse, the cell temperature does not relax back to the previous level.

Miles has submitted a paper about his NHE experiments to the *Journal of Electroanalytical Chemistry*. It is now going through the final stages of peer review and will probably be published soon.

Talbot A. Chubb and Scott R. Chubb, "Energy Production in Arata and Zhang Study and Its Theoretical Basis"

This lecture dealt mainly with nuclear theory, which is over my head. However, Chubb has been in communication with Arata, at Osaka University, and he began by describing some of Arata's recent work. Arata claims he has 100% reproducible cells with the double structured cathode. The methodology and apparatus have not been changed for several years. When Chubb showed a recent photo of the apparatus, Russ George and Michael McKubre, who visited Arata, said every piece of the equipment in the set-up is exactly as it was. While I am delighted to see consistent results and 100% reproducibility, I do not see the point of performing the same experiment over and over in isolation. Miles performed the same experiment in another lab in front of a new audience. Mizuno does his glow discharge experiment in front of visitors, including Zhao of the Kansai Research Institute (KRI) and me. Arata should help others replicate the way he helped SRI. I have heard from other Japanese cold fusion scientists that several groups have tried to replicate his work without success, and he will not assist them.

As noted above, SRI successfully replicated this work, and saw excess heat and helium with double structured cathodes they received from Arata. They previously reported excess heat from double structured cathodes which they made themselves.

Russ George, "Observations of Anomalous ^{3}He and ^{4}He in Metals Using High Resolution High Sensitivity Mass Spectroscopy"

I will briefly describe the gist of George's presentation quoting his Five Point Summary slide. He makes many wide-ranging, extraordinary claims that he has achieved 100% reproducibility and that he has detected helium, but he does not back up these claims with much data, and he frequently evades the issue. For example Fleischmann asked where Arata obtained Pd-black:

> **MF**: Does anybody know where he got [the Pd-black] from?
> **RG**: Yes.
> **MF**: Is that information in the public domain?
> **RG:** No, but I'll tell you. It was made in the U.S., and sold by a U.S. firm to a Japanese supplier, who passed it on to Arata. The neat thing about Arata is that he has only spoken about a fraction of his studies. Which is what we all do. . .

After saying he would reveal the name of the supplier, he then refused to do so. I doubt this information has commercial or investment value to George, but if it does, and if he has some legitimate reason to keep it secret, he should not offer to reveal it in the first place. As he says, many cold fusion scientists do reveal only a fraction of their promising results, but this is nothing to brag about. It is self-defeating. George did go on to say that the material used by Arata is made up of 30 to 50 nanometer particles, and common Pd-black particles are 200 to 300 nanometers, and he said "the literature on catalysts" shows that the 0.5% palladium catalysts Les Case uses also have ~50 nm particles, so he thinks this is the magic domain that produces a detectable cold fusion reaction. He did not document these claims. (That is, he did not say which literature on catalysts.)

George concluded his talk with a Five Point Summary:

1) There are good heat-producing protocols now "well in hand." George has worked with three protocols that work "quite well" (Stringham's sonofusion, Arata's double, Pd-black, Case's gas-loaded catalyst), and he is "infatuated" with a fourth: electromigration.

2) He-3 and He-4 diagnostics are well-defined and available.

3) Real-time helium detection is the best nuclear evidence. Ignoring heat, we can show that nuclear processes are at work.

4) Heat at hundreds of watts is at hand, and quite readily available. Presumably this refers to the Stringham cavitation device.

5) There is a clear path forward, to come up with useful energy-generating devices for consumers. At least, the science is clear; things like politics and patents may not be.

I disagree. These devices are not "readily available," perhaps because people like Stringham, Arata, and George do not try to distribute or market them. They often refuse to describe them, demonstrate, or file for patents. And they have the gall to complain that people ignore them and refuse to fund their research!

Benjamin Bush, "Excess Heat and Commensurate Nuclear Products Associated with Cold Fusion: D+D → ^{4}He + 23.82 MeV is found Quantitatively and Reproducibly"

The focus of Bush's research has been detection of helium and the correlation of heat with nuclear products. He is convinced the cold fusion reaction is conventional D-D fusion, in which two deuterons combine to produce one helium-4 atom and 24 MeV of energy (3.8×10^{12} joules).

Bush began working in the field in collaboration with Melvin Miles. Miles ran electrochemical cells, collected flasks of effluent gas, and sent them to Bush, who looked for helium in blind

New Energy Times Archive

tests. He developed a two-stage activated charcoal cryofilter to remove deuterium and most other gases from the samples, leaving mainly helium, which flows into the mass spectrometer.

Miles used an open cell, which Bush says is ideal for helium studies because it produces a continuous stream of electrolysis offgases (hydrogen and oxygen), making it "simple, self-flushing and self-correcting." The flask used to collect the sample is attached to the cell and purged with nitrogen. Then the effluent gas is allowed to flow through it. Enough gas flows through to fill the flask at least fourteen times. Each of these fourteen "system volumes" removes about half of the contamination in the cell, thus after fourteen system volumes only 0.0061% of the initial contamination remains.

The first studies showed that the amount of helium varied with the amount of heat and correlated with it. Later studies were more quantitative, establishing the amount of energy per atom of helium-4. Bush performed electrolysis experiments at SRI with a Calvet (or "Seebeck") calorimeter, a type he strongly recommends. He graphed excess heat versus helium production for both his experiments and Miles' on the same graph. Although the error bars are large, the points line up at 24 MeV per atom of helium-4.

The ratio of neon to helium indicates the helium is not contamination. The ratio of helium-3 to helium-4 seems to fit a nuclear theory proposed by Tom Ward of the DOE. Bush says he does not understand the Ward theory in detail, but he confirms the predicted ratios. Whether it fits the theory or not, the helium-3 is three times more prevalent than it is in the atmosphere, so whatever the origin, it cannot be atmospheric contamination.

In his ICCF-7 paper, Bush says you must look in the effluent gas; the helium will not be found anywhere else, because the reaction occurs on the cathode surface.[9] Yet many people look in the metal instead. "The only reason people persist in analyzing the cathodes for helium is that sampling is trivial. One merely cuts off a piece of metal and melts it in the mass spec. analysis system." This is also why so many scientists look for neutrons. They resemble the drunk who drops his key in the garden but looks for it under the street lamp instead, because that is where the light is.

Bush does not mince words or hesitate to reach conclusions. He said he reproduced Miles, which demonstrates "massive reproducibility by independent labs." He concluded, "Experimentally cold fusion is thus found to be D+D fusion." (See Figure 1 comparing results from Miles and Bush.) The branching ratios and the lack of penetrating radiation are mysteries of course, but Bush takes the experimentalist's point of view and accepts results at face value. He has a working hypothesis which involves two ideas:

1) Electromagnetic reactions overcome the Coulomb barrier and disperse the energy burst from the reaction across the lattice. He briefly described some of the ramifications of this, including the reaction time and atomic distances involved.

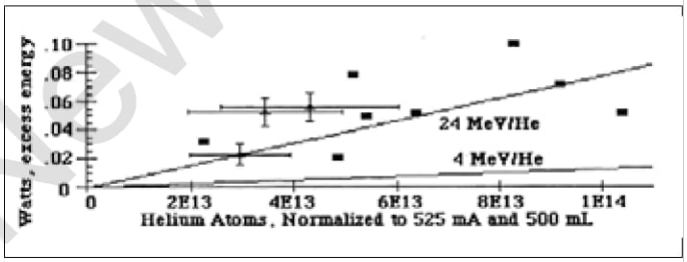

Figure 1. Heat versus helium data plotted at a constant sample volume and electrolysis current to render the plot two-dimensional. 1 Watt = 6.25×10^{12} MeVs. Data points with error bars are from Bush *et al.*; those without error points were reported by Miles (*Proceedings ICCF-7*, p. 41).

2) The nonconducting passivating silicate films that form on the metal surface are important because they enhance overvoltage, which produces massive pressure. The palladium silicate interface constitutes a solid state device.

He dismisses reports of heavy element transmutations. He saw no evidence for them in an NAA analysis of his cathodes. Transmutations are often accompanied by microscopic damage and vaporized spots on the cathode, but he has never looked for damage with an SEM. He is adamant about transmutations; he told me, "I just walk away when the topic comes up." This reminds me of the anti-cold fusion skeptics who refuse to look at data. Bush's main reason for doubt is that the energy balance can be explained by the D-D reaction alone; there is no room in the equations for energy from heavy element transmutation. This argument is weak. Ed Storms pointed out that heavy element transmutations produce much less energy than deuterium fusion and they would contribute little to the energy balance. To put it another way, they make far more nuclear ash per joule of heat than the light element reactions. They might even be endothermic, since cathode elements are generally heavier than iron (except titanium) and the reactions may be fusion, not fission. Bush's own energy balance data is crude, but, as described above, McKubre has more refined statistics: 105% ± 10% of the expected helium balance. This leaves room for a small contribution from heavy element reactions. The fact that Bush saw nothing with the NAA may indicate that some cathodes undergo transmutations and others do not, just as some produce tritium and others do not.

Bush discussed calorimetry at length. He reviewed some of the ABCs: "Electrolysis calibration must match resistance heating calibration or your calorimeter does not work." He repeated the point made by Fleischmann and McKubre: the calorimeter itself affects the reaction, because it promotes or inhibits positive temperature feedback. He speculated this is because heat affects the ionic transport in the silicate barrier.

He prefers to work with a Calvet Seebeck calorimeter because it is the most fundamental type, and it captures almost all of the heat emitted by an object, regardless of the shape of the object or distribution of the emissions.[10] Suppose an isoperibolic cell is placed in a water bath and most of the heat in it is generated close to the top. A fraction of the heat will escape out of the top, unaccounted for. It might be significant and you would have to calibrate many different ways at different power levels to find out. The Calvet calorimeter is a cube with walls made of hundreds of thermal flux transducers, that is, thermocouples wired together in series. The walls surround the sample on all sides. Whether the heat from the sample radiates to all six walls evenly, or whether most of it rises and impinges on the top wall makes no difference. As Bush says, "You measure all the heat all the time."

The Calvet calorimeter does have a drawback. It does not cause positive feedback and rapidly changing conditions, which promote the reaction. The isoperibolic calorimeter does cause positive feedback, which is why Fleischmann and Pons recommend it, but it has drawbacks, too. This dilemma can be resolved by putting an isoperibolic calorimeter inside a Calvet calorimeter. In practice this just means you use a cell with a well-insulated wall, like a Dewar.

The Calvet calorimeter is less affected by ambient temperature changes than other types because it has a short time constant: under five minutes, whereas I believe other types are typically fifteen to thirty minutes or longer, depending on how much water the cell holds. (The time constant is the measure of how quickly the calorimeter settles at a given temperature—comes to equilibrium—at a given constant power level.) Bush keeps background fluctuations to a minimum by

New Energy Times Archive

submerging four Calvet calorimeters in a constant temperature water bath, which varies less than 0.01°C.

You cannot buy a standard isoperibolic or other water-based calorimeter off the shelf. You have to make one and you have to know what you are doing, and most people do not. Bush himself struggled with this problem and made many expensive mistakes. At ICCF-7 he described the problems and wasted years trying to scrimp on research funds and use components in ways they are not intended to be used:

> *Warning: thermal flux calorimeters based on Peltier devices (e.g. Melcor refrigchips) will fail in the most insidious fashion possible;* several man-years have been wasted on Peltier devices between the Navy and ourselves.

Bush, like most others in this field, says that cathode material development is the key to reproducibility. He commented on the outlook for practical applications. Electrolysis is a low-temperature process. It cannot go much above 100°C, even with pressurized cells. Molten salt electrolysis has more promise technologically because it operates at high temperatures with good Carnot efficiency.

Bush is no longer able to perform cold fusion experiments, because he cannot find funding. As he told me later, he was "hammered politically" for performing these experiments in the first place, and he got into even more trouble when he reported positive results. Only a brave or foolhardy scientist will report a positive cold fusion result.

Bush ended his talk by commenting on global warming. He thinks it is a real problem, it will cause massive damage and extinctions, and it is now unavoidable. Even if cold fusion can be developed quickly, there is already so much carbon dioxide in the atmosphere that ocean water levels will rise catastrophically. Cold fusion will be too late to prevent that from happening, but it may keep it from getting worse. I am a little more optimistic. Assuming the atmospheric models are correct and the threat is real, I suppose that with enough energy, gigantic machines and indoor factory farms can be set up to rapidly absorb and sequester carbon. This would be a massive undertaking on a scale that would dwarf the logistics behind the Second World War or the construction of the U.S. highway system, but if the planet was in serious danger, species were going extinct, and low-lying cities were inundated with sea water, people would be willing to spend the money.

References

1. Fleischmann, M. 1998. "A Cold Fusion: Past, Present, and Future," *Proceedings ICCF-7*, 119.

2. Fleischmann, M. and Coehn, A. 1994. "After: The Alpha, Beta, Gamma of the Palladium Hydrogen System," *Proceedings ICCF-4*, **1**: Plenary Sessions, 19.

3. Saito, T., Sumi, M., Asami, N., and Ikegami, H. 1995. "Studies on Fleischmann-Pons Calorimetry with ICARUS 1," *Proceedings ICCF-5*, 105.

4. Private communication, December 1999.

5. Klopfenstin, M. and Dash, J. 1998. "A Thermal Imaging During Electrolysis of Heavy Water with a Ti Cathode," *Proceedings ICCF-7*, 198.

6. *Encyclopedia Britannica* and http://www.webelements.com/web elements.

7. Mizuno, T. 1998. *Nuclear Transmutation: The Reality of Cold Fusion*, Infinite Energy Press.

8. Private communication, December 1999.

9. Bush, B. and Lagowski, J. 1998. "A Method of Generating Excess Heat with the Pons and Fleischmann Effect: Rigorous and Cost Effective Calorimetry, Nuclear Products Analysis of the Cathode and Helium Analysis," *Proceedings ICCF-7*, 38.

10. Bush recommends instruments manufactured by Thermonetics Corporation 619-488-2242, http://www.electriciti.com/~thermo/tc.html

Cold Fusion Conferences, Conference Proceedings, and the Internet

I was not able to attend the American Chemical Society conference, but fortunately Akira Kawasaki was there, and he made video tapes of the sessions. The quality of the video tapes is good. You can hear every word and read most of the overhead projections. A few minutes are missing from the start of Szpak's presentation, but the others are intact and even the question and answer sessions are audible. My summary of the conference is based on the Kawasaki tapes and on the abstracts, which were distributed on a CD-ROM. Kawasaki is making the tapes available at a nominal cost. He can be contacted at:

Akira Kawasaki, 8661 Wonderland Avenue, Los Angeles, California 90046; Tel: 323-656-7817; email: aki@ix.netcom.com

In the past, I transcribed lectures and interviews using a cassette tape. This time, I copied the audio tracks into my computer with a digital audio editor (Cool Edit, Syntrillium Software).[1] This is handy for listening to segments repeatedly while transcribing comments. After experimenting with various formats, I found that the Microsoft ADPCM WAV format takes up the least amount of disk space. It can be played back with many programs including the Microsoft Windows Media Player, which comes standard with Windows. A thirty-three minute lecture takes 62 megabytes, with monaural recording at 16,000 samples per second. This is not good enough for music, but it is fine for speech. Like other computer data, the recording can be copied or played back any number of times with no degradation in quality. You can store it on a rewritable CDR disk at the cost of $1 per twenty hours of speech. I can make the audio track CDR available at cost to interested readers. Contact: JedRothwell@infiniteenergy.com.

Computers, abstracts, and audio recordings on CDR, and other high tech tools can reduce drudgery and speed up the accurate, timely transmission of data and scientific papers. It is a shame cold fusion scientists do not make better use of these tools. More young scientists would be attracted to this field if only they had some way of learning about it in addition to this magazine.

I wish that cold fusion conference videos could be broadcast and permanently archived on the Internet. Everyone should have the opportunity to see and hear researchers talk about their work. This would not be possible today. Even with a fast ADSL connection, video images take three times longer to download than to play, and are far too small and grainy. You would not be able to read the graphs and figures in a video. It may be five or ten years before the Internet and the average computer can handle videos, but documents such as the ICCF proceedings could easily be made available on the Internet today, and it is a shame they are not.

In a video lecture on CNN a few years ago, Arthur C. Clarke remarked that copyrights and intellectual property are the biggest roadblocks to progress on the Internet. You cannot expect writers to hand out the fruits of their livelihood for free. Until we can conveniently charge readers, the Internet will not be suitable for publishing new, in-depth information. It will contain only summary information, old books with expired copyrights, and a vast treasury of free misinformation. It will remain "an ocean a thousand miles wide and one inch deep."

Reference

1. Syntrillium Software Corporation, P.O. Box 62255, Phoenix, Arizona 85082-2255; www.syntrillium.com

FUSION and OTHER NUCLEAR REACTIONS IN THE SOLID STATE

Volume 2 - Calorimetric Complications [Includes: "LESSONS FROM OPTICAL EXAMINATION OF the PFC Phase-II CALORIMETRIC CURVES"]
Edited by Dr. Mitchell Swartz
JET Technology Press (Wellesley, MA)
ISBN 1-890550-02-7, March 1999
(60 pages, 8 color figures) The book is part of a series.

$32.95 North America
$37.95 Foreign
(Includes shipping/handling)
Available from Cold Fusion Technology
P.O. Box 2816
Concord, NH 03302-2816
Phone: 603-228-4516 Fax: 603-224-5975

New Energy Times Archive

The Present Status of Chemically-Assisted Nuclear Reactions

Edmund Storms*

From a lecture given at the American Chemical Society Meeting, October 8, 1999.

Most people trained in science believe that chemically assisted nuclear reactions (CANR), a.k.a. cold fusion, are impossible. Yet, hundreds of scientists in dozens of laboratories worldwide have seen anomalous effects. These include heat in excess of what is expected, anomalous radiation, and unexpected elements which include radioactive and non-radioactive isotopes. This conflict between belief and experience presents a problem which has polarized science and hampered normal study of the claims.

The skeptics resolve this problem by assuming that our current understanding of nuclear interaction is adequate and proves that the experimental observations are impossible. Not only are the claimed reactions considered impossible at such low energy, but even if such reactions should occur, the so-called nuclear products are of the wrong kind and in the wrong amounts. Therefore, the experimental results must be caused by error, prosaic processes, or delusion. Difficulty in replicating the observations adds to the suspicion.

On the other hand, supporters of CANR claim that past studies of nuclear interaction using plasmas and high-energy beams do not apply. The strange effects are only found to occur in a solid lattice involving special chemical environments. This environment is proposed to have unexpected properties which can produce some new and subtle processes. These processes allow the Coulomb barrier to be overcome and the resulting energy to be transferred more or less uniformly to many atoms rather than just to the nuclear products. A rich assortment of models is being explored. The difficulty in replication is attributed to a great difficulty in obtaining the required structures.

The challenge is to resolve these two conflicting views. I believe sufficient information exists to make such an effort worthwhile. However, I have time today to show you only a very small fraction of what is known. Over two thousand publications are now available in conference proceedings, reports, and peer- reviewed journals. The conclusions are no longer based only on the work of Professors Pons and Fleischmann, the original discoverers. Work continues in six countries.

In evaluating published work, I am fully aware of the need to be skeptical of claims, and the need to look for unrecognized errors. Indeed, not all the studies are correct and many do not even show anything worthwhile. However, the general phenomenon called cold fusion has now been well-demonstrated many times, and these studies show common patterns of behavior. These patterns, as well as the many duplications, make the claims increasingly believable.

The original work was based on the use of an electrolytic cell to load deuterium into palladium, the nuclear-active material in this case. Eight other methods, listed in Table 1, are now known to produce anomalous effects.

The first important point is that most of these methods have been found to produce anomalous results when either deuterium or normal hydrogen is used. However, different nuclear products are found. In addition, palladium is the preferred, but not the only active metal when using deuterium, while nickel is the best metal when using normal hydrogen. Palladium used with protium and nickel used with deuterium are both inactive. If the skeptics were correct, I would expect the results to be largely independent of the metal used as the active site or of the hydrogen isotope. The fact that the results depend on the materials used is an important indication that a truly anomalous phenomenon may be operating.

I will describe a few of these methods and I will concentrate on the use of deuterium rather than protium.

Table 1. Methods Used to Produce the CANR Effect

Electrolysis of liquids (D_2O, H_2O)
Gas Reaction with microcrystals (D_2, H_2)
Cavitation using ultrasonic bubble formation (D_2O, H_2O)
Plasma discharge in a liquid (D_2O, H_2O)
Glow discharge in low pressure gas (D_2)
Proton conduction in semiconductors (D)
Sudden decomposition of the hydride (D)
External mechanical stress of hydrides (D)
Biological systems (D, H)

The electrolytic technique has received the most attention although it is not easy to make work. Nevertheless, it has been claimed to produce anomalous heat, tritium, helium, and various transmutation products. Minor neutron, X-ray, and gamma ray emissions have also been detected.

Figure 1 compares eleven studies of anomalous heat production using D_2O and Pd cathodes done before 1991. Excess power/cm^2 is compared to the applied current/cm^2. Many separate samples studied at different times are shown. I want to make three points.

1) A significant number of internally-consistent, supporting studies were available early in the field's history. Thus, when skeptics claim that a significant amount of supporting data is not available, they are poorly informed. At the present time, well over 150 examples can be cited. Subsequent results are consistent with the behavior shown in the figure.

2) Excess heat production is clearly a function of applied current with very little effect at low current. Thus, many of the failed

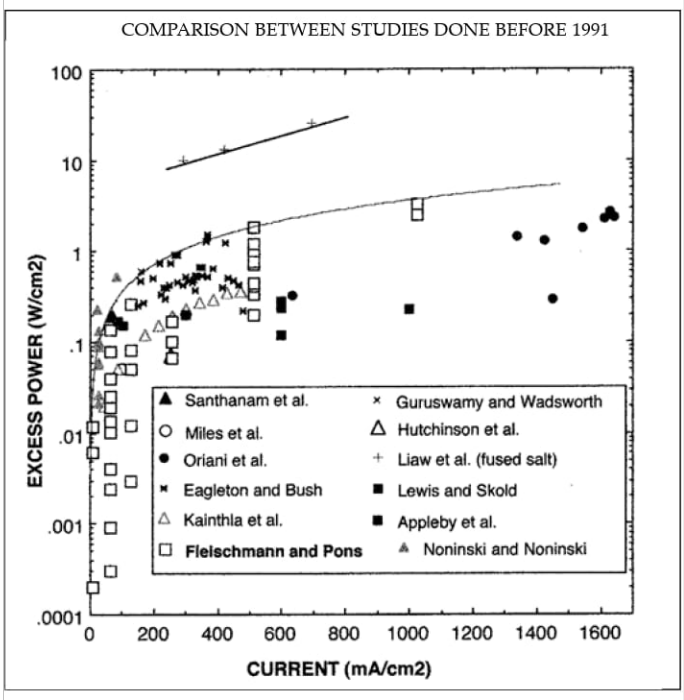

Figure 1. A comparison of excess power versus applied current for several early studies using many separate samples. An apparent upper limit to the excess energy values is shown by the line.

New Energy Times Archive

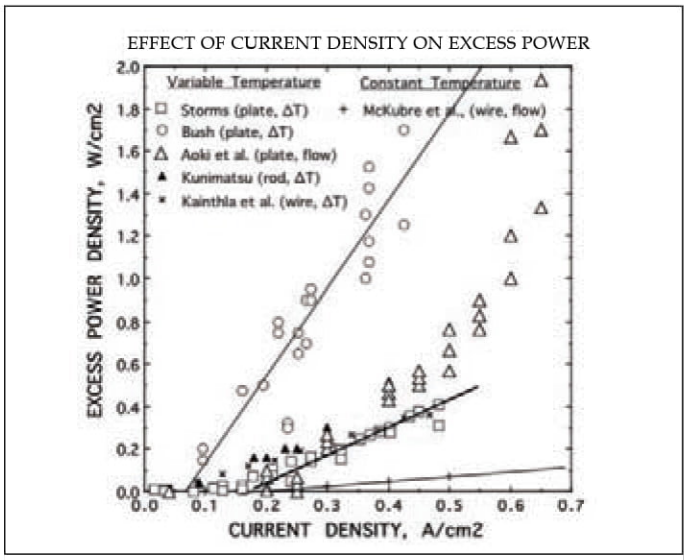

Figure 2. Variation of excess power produced by changes in applied current. The line drawn through the Bush data follows the upper limit shown in Figure 1.

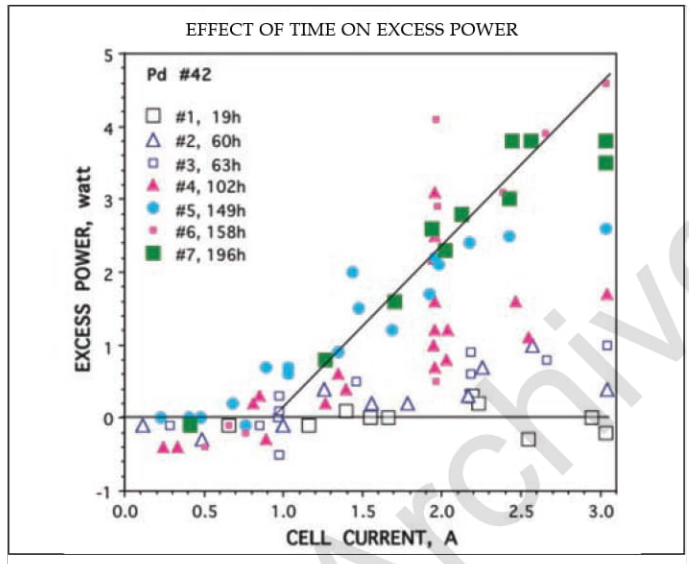

Figure 3. Increase in excess power versus applied current for different times. This sample showed the same effect several times after being deloaded and reloaded.

attempts to duplicate the effect using low current can be explained.

3) An upper limit to the effect appears to be present. This behavior is typical of an effect which is sensitive to the properties of the material, with each value being influenced by a different fraction of the required conditions within the cathode structure. All subsequent studies fall below this limit. It is not surprising that the fused salt work done at 450°C falls outside of the Pd-D_2O studies done near room temperature.

Let's examine heat production in a little more detail before going on to other anomalous products. A more detailed view of the low current region of Figure 1 is shown in Figure 2.

In this case, changes in excess power are produced when the current applied to an individual sample is changed. You can see very clearly the need for a critical current to initiate the effect. The behavior is seen regardless of the shape of the cathode or the type of calorimeter used. In addition, the effect is found in all studies that have made the necessary measurements, although different values for the critical onset current are frequently found. The effect is much reduced when the temperature of the cathode is kept constant as was done by McKubre *et al.* I should point out that the critical onset value in this work is much more obvious when the scale is expanded.

The slope of excess versus current above the critical onset value is time dependent. This can be seen in Figure 3 where the relationship is plotted after different times.

This effect is more obvious in Figure 4, where the excess at constant current is shown to increase over time. This behavior is also seen in all studies.

Why does current have this effect? Figure 5 gives the answer. Here we see the relationship between average composition of the palladium cathode and excess power. As you can see, a critical composition is required with higher compositions producing more anomalous heat. The value of this composition is determined by the amount of the applied current. The lack of reproducibility has been found to be caused mainly by the inability to achieve the required composition because of cracks in the cathode structure. This behavior is also seen in all studies which have measured the cathode composition.

These figures demonstrate that an effect occurs having several behavior patterns that are independent of the experimental design and the experimenter. This is a situation science requires for believing a phenomenon to be real.

If we grant the reality of anomalous energy, which should be important in its own right, this does not prove the presence of a nuclear reaction. We need to detect a nuclear product to answer this question.

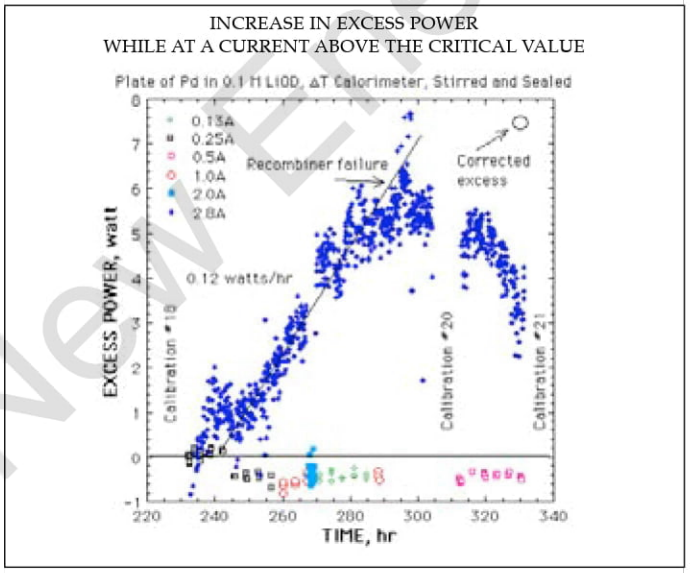

Figure 4. Increase in excess power as a function of time at constant current. The calorimeter was calibrated before, during, and after the effect.

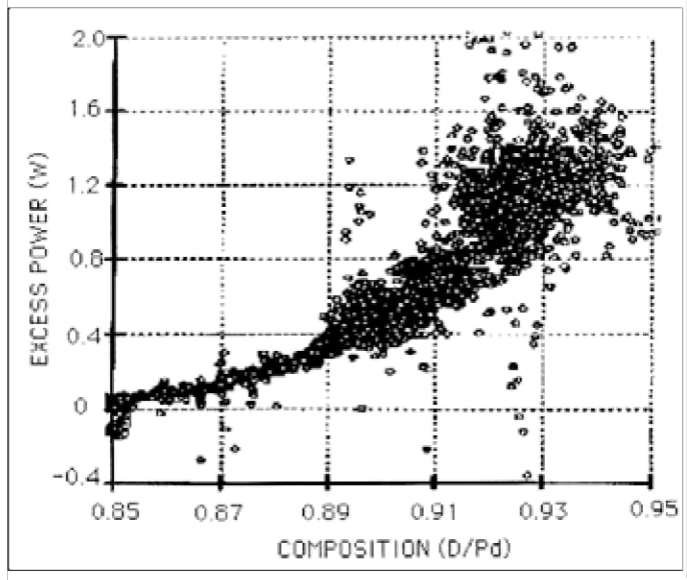

Figure 5. Relationship between applied current and composition of the cathode. Figure from studies done at SRI.

New Energy Times Archive

The expected and much sought after product is neutron emission. After all, this easy to detect product is found in large abundance when fusion occurs under conventional conditions. In contrast, the cold fusion environment is found not to emit significant neutrons. On the other hand, at least six studies of anomalous helium production and over 150 reports of tritium production have been reported. In addition, the list of transmutation products is also growing. Of these nuclear products, only helium production shows a quantitative relationship to measured heat production in the heavy-water system.

Figure 6 compares two independent studies of helium production rate per watt versus excess power. The heavy line represents the value expected if the reaction produced 24 MeV/He atom—in other words, the energy from a "normal" fusion reaction. Skeptics dismiss these results because conventional theory and experience require emission of a 23 MeV gamma ray. Such emission is not observed. The average measured result is about a factor of two lower than would be expected based on "normal" fusion. This difference is consistent with one half of the helium being retained within the cathode structure, a reasonable amount. Adding to the support is the fact that no helium was observed when no excess heat was produced and helium was always detected when excess power was detected, with one exception.

The tritium results are equally impressive and hard to explain by conventional means. However, I do not have time to discuss them. The transmutation studies would also take too much time to explain. You can obtain more detailed information from several reviews I have written on the subject.

Let's now go on to the next method. Gas reaction with microcrystals is claimed to produce excess energy as well as helium. Several variations on this method have been found to work. One method, developed by Professor Arata in Japan, subjects palladium black to deuterium gas, and the other, discovered by Dr. Case in the U.S., uses palladium microcrystals which have been deposited on carbon, *i.e.* a normal hydrogen catalyst. Both configurations produce the same anomalous effects. Figure 7 shows an example of helium production as a function of time after a sample of hydrogen catalyst was exposed to deuterium gas and heated to 200°C. As you can see, the amount of helium detected is too great to have resulted from diffusion of helium-containing air into the apparatus. While it is conceivable that the helium might have been released from the catalyst structure, similar studies of other samples from the same batch do not show the effect. In addition, similar results were obtained by Arata using an entirely different material. In this case, the measured helium came from that which was locked within the palladium structure rather than helium released into the surrounding gas. This retained helium was found to be present only after anomalous energy was produced by the cell.

The final technique I will discuss today is sonic cavitation, developed by Roger Stringham and Russ George. When an intense sound wave is caused to pass through a liquid, bubbles are generated at the peaks of the wave. When these bubbles exist next to a metal surface, they will inject a plasma into the material as they collapse at the trough of the wave. If the metal is palladium and the liquid is heavy-water, a steady flux of D^+ and O= will be injected. The D^+ will diffuse away from the surface and build up high local concentrations while the O= remains behind as PdO. Under the correct conditions, anomalous energy, helium, and transmutation products have been detected. Figure 8 compares the applied power to the total thermal power. Points which fall above the line indicate production of anomalous power, in this case occasionally over 125 watts.

I have shown just a few of the many anomalous observations. In addition, when suitable materials are available, a consistent pattern of behaviors is seen by everyone who has made the necessary measurements. While I sympathize with the skeptics, the very broad and well-done studies now available make a complete rejection of the claims very hard to justify.

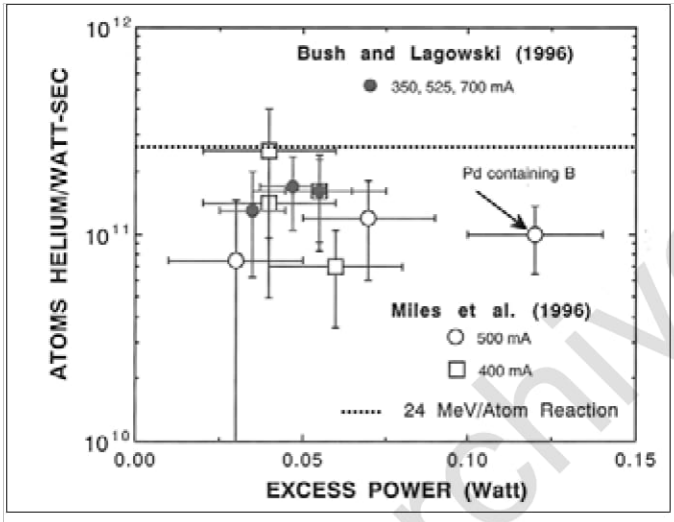

Figure 6. Relationship between He atoms/watt and excess power.

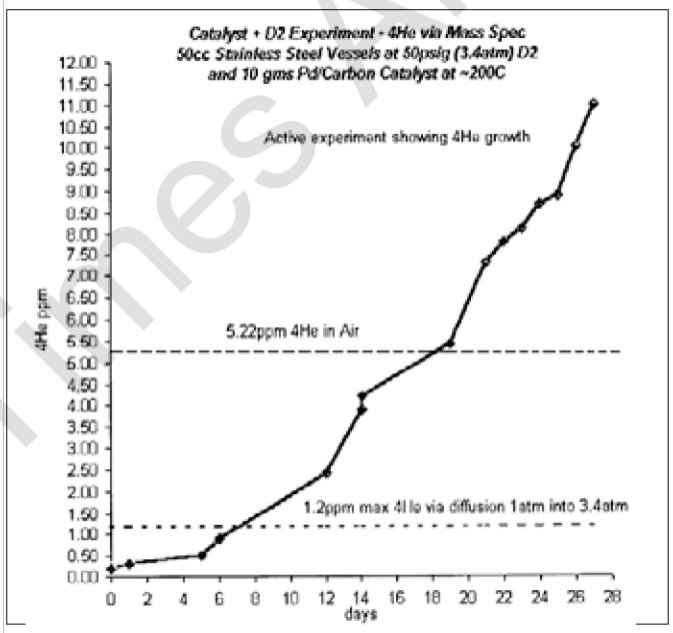

Figure 7. Growth of helium in a sealed cell containing a hydrogen catalyst and D_2 gas. Work done at SRI.

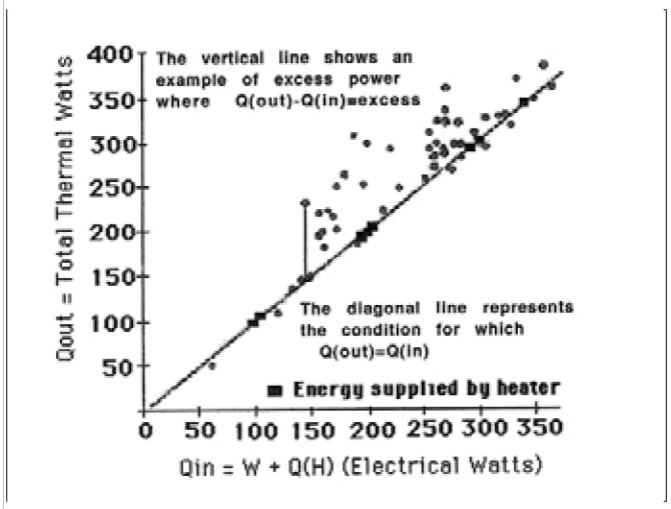

Figure 8. Power produced during sonic cavitation of D_2O against Pd.

*Energy K Systems, 2140 Paseo Ponderosa, Santa Fe, New Mexico 87501
(See Issues 24 or 27 for complete biographical information.)

New Energy Times Archive

Prosaic Explanations: The Failure of UFO Skepticism

Bruce Maccabee*

Why UFO's?

EDITOR'S NOTE: Some might argue that *Infinite Energy* should not devote its pages to discussions of what might be regarded as "peripheral issues." One such matter is the controversy about the significance of the multichannel evidence to be found in UFO reports. It is most definitely *not* the intent of *Infinite Energy* to become a continuing forum to debate UFO evidence, in particular whether it does or does not support the extraterrestrial hypothesis. On the other hand, *Infinite Energy* is at the vanguard of publications that support much greater openness in science.

We firmly believe in fairly considering evidence for highly anomalous phenomena that have the potential to radically change our world view. We reject the "end-of-science" notion that contemporary science offers a nearly complete cosmology and that radical revisions of the basic pillars of contemporary scientific knowledge are unlikely. Our overriding interest is *evidence* and the *methodology* by which that evidence is handled. Does the house of science dismiss other frontier science evidence with a similar lack of care that has characterized its treatment of cold fusion?

How did UFO reports enter the picture? In Issue No. 23 we dissected and attacked the hypocritical knee-jerk dismissal and mocking of the evidence for cold fusion (LENR) reactions by the planet's most outspoken "end-of-science" organization, CSICOP. Subsequently, CSICOP's main agent in charge of UFO report debunking, Philip Klass, took me to task in a Letter to the Editor (*Infinite Energy* No. 26, p. 6) about the nature of his stance in UFO investigation. He wrote, "If I had found even a single case that defied prosaic explanation, I would have rushed to my typewriter (now my PC) to write the most exciting story ever published by *Aviation Week & Space Technology Magazine.*" That prompted me to ask experienced UFO-investigator Dr. Bruce Maccabee whether he could cite specific examples of how Klass had perhaps incorrectly come to some of these "prosaic" explanations. That query led to this article by Maccabee.

Maccabee has done a commendable job of exposing the methodologies of Klass. If his assessment is on the mark, and I believe it is, the Klassian approach to examining UFO reports is highly flawed. Readers who ordinarily may have little interest in the quagmire of the UFO debate will at least be able to witness how evidence for a purported astonishing anomaly is handled by someone whose mind appears to be made up *a priori*. If you are really curious, by all means read Klass' books too, which claim that all apparently resistant UFO cases have prosaic explanations.

While Maccabee's article was in preparation, there emerged from France a high-level official report about UFOs, which involved many people in the French military. We thought our readers should realize that despite at least *public* official government dismissal of UFO evidence in the U.S., thoughtful senior officials abroad do not fear confronting the possible implications of the UFO evidence. Accordingly, we also reprint a summary of that report by Gildas Bourdais.— *EFM*

If all UFO sightings had reasonable explanations, then theoretical speculations about ET intelligences visiting the earth might be interesting but of little practical consequence. Ufology would consist of studying witnesses who failed to identify explainable (identifiable) phenomena or who simply made up "tall stories" about ET visitation. "Ufological science" would consist of psychology, psychiatry, and, perhaps, sociology. There are skeptics who believe that ufology should consist of exactly this.

Noted UFO skeptic Philip J. Klass has provided perhaps the most straightforward statement of the skeptic's position on UFO sightings in his book, *UFOs: The Public Deceived*,[1] wherein he writes the following about the "Occam's Razor" alternative to unexplained UFO sightings: ". . .roughly 98% of sightings are simply misidentifications of prosaic, if sometimes unfamiliar, objects by honest persons. . .the balance, roughly 2%, are self-delusions or hoaxes by persons who like to spin tall tales and become instant celebrities." In other words, UFO reports are the result of misidentifications, delusions, and hoaxes! There is not one case for which there is no "prosaic explanation." As evidence of this Klass has offered prosaic explanations for a number of famous sightings. Klass has not attempted to explain each of the hundreds of thousands of sighting reports which have been made over the last half century. However, he has proposed explanations for a representative sample of reports which are classified as "good" by most ufologists and, on this basis, he has generalized his statement to apply to the bulk of the UFO sighting reports.

Klass states that he has provided "prosaic" explanations for all the reports he has studied. Klass would have the reader believe that he has correctly explained all the sightings he has investigated. If he were correct, then his argument about misidentifications, hoaxes, and delusions making up 100% of UFO sightings would be unassailable, at least for the sightings which he has investigated. However, in some cases he has offered prosaic explanations which are demonstrably wrong, *e.g.* "The Case of the Flashing Triangle." In other cases he has proposed explanations which may not be provably wrong but which are, at the very least, unconvincing, *e.g.* "The Case of Arnold's Sighting." (Note that in the absence of confirmatory information, it may not be possible to decide whether an explanation is correct, but it is possible to decide whether or not an explanation is convincing.) Hence, Klass' claim is literally correct: he has offered prosaic explanations for the sightings he has investigated. But the logical inference that these are the correct explanations is wrong; there are sightings which he has investigated but has not explained.

Klass, having analyzed these cases carefully, has proposed the only potential explanations that remain after all other explanations have been rejected. That is, there are no other potential prosaic explanations that make any sense. Hence, after his proposed explanations are proven wrong, there are no remaining candidate explanations and the sighting becomes that of a TRue UFO (TRUFO), which might be evidence of Other Intelligences (OI), or Non-Human Intelligence (NHI), or perhaps even ExtraTerrestrials (ET).

The Case of the Damaged Police Car

The first example of a case for which Klass' proposed prosaic explanation is wrong or, at best, unconvincing, is the rather traumatic experience of police officer Val Johnson of Warren, Minnesota.[2] The following is a synopsis of Officer Johnson's official

Infinite Energy Archive

report. Shortly after 1:30 a.m., August 27, 1980, as he was patrolling the countryside, he noticed a bright light through the trees of a small wooded area. Thinking it might be a landed airplane carrying illegal drugs from Canada, he accelerated toward the area of the light. Suddenly this light moved rapidly toward his car. He heard a noise of breaking glass and lost consciousness. Upon regaining consciousness, he called the police station. It was 2:19 a.m. (He had been unconscious for about forty minutes.) He reported that something had "attacked" his car.

When another officer arrived on the scene a few minutes after Johnson's report, he found Johnson's car perpendicular to the road and skid marks nearly 100 feet long. Johnson was found in a state of shock with a red mark on his forehead. He said he recalled seeing the bright light rushing toward his police car and hearing breaking glass. The next thing he recalled was sitting with his head on the steering wheel. He did not recall skidding to a stop. He complained about pain in his eyes and was taken to a doctor, who could find no eye damage. He did not complain of a headache.

Of particular importance is damage to the police car. One of the two glass headlight covers on the driver's side had been broken; the windshield on the driver's side had a large crack; the plastic cover on the rooftop light bar had a hole in it; there was a dent in the hood; and two of the three spring-mounted antennas were sharply bent—sixty or more degrees. Examination of the antenna surfaces using a microscope showed that the insect matter ("bug tar") that coated the antennas was "stretched" at the bend, but there was no other disturbance of the insect matter. Evidently, the antennas had not been scraped or rubbed when they were bent. Also, the electric clock in the car and Johnson's mechanical wristwatch both read fourteen minutes slow, although Johnson was certain he had set both before he had begun his nightly patrol.

The damage to the car was physical evidence that something strange had taken place. Careful studies of the damage were made by the police department and by scientists working with the Center for UFO Studies. They could find no evidence or reason to believe that Johnson had damaged his own car. They could find no prosaic explanation for the sighting. Klass also investigated the sighting. He concluded his discussion of the Officer Johnson UFO sighting by offering two alternatives:

> The hard physical evidence leaves only two possible explanations for this case. One is that Johnson's car was attacked by malicious UFOnauts, who reached out and hit one headlight with a hammerlike device, then hit the hood and windshield, then very gently bent the two radio antennas, being careful not to break them, then reached inside the patrol car to set back the hands of the watch on Johnson's arm and the clock on the car's dashboard. These UFOnauts would then have taken off Johnson's glasses, aimed an intense ultraviolet light into his eyes, and replaced his glasses, while being careful not to shine ultraviolet on his face. Or the incident is a hoax. There are simply no other possible explanations.

Klass' amusing version of the "UFO/ET hypothesis" should not detract from the importance of his statement that, "There are simply no other possible explanations." In other words, if it was not a hoax then there is no prosaic explanation for this sighting. Perhaps Klass realized that the hoax hypothesis was unconvincing at best and intentionally tried to make the UFO alternative seem silly.

The police department did not accuse Officer Johnson of damaging the police car. Yet Klass' book, published about three years after the incident, clearly implies that this event had to be a hoax since it was not a misidentification or a delusion (recall that, according to Klass, roughly 98% are misidentifications and the remainder are hoaxes or delusions). An extensive investigation failed to find any evidence of a hoax. Hence this event was, at the very least, unexplained and could even be evidence of OI/NHI/ET.

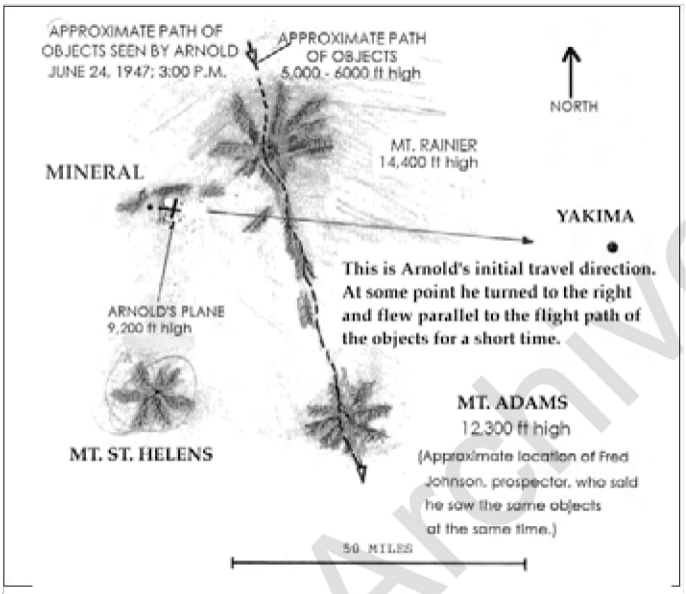

Figure 1. Kenneth Arnold's Sighting. (Figures provided by author.)

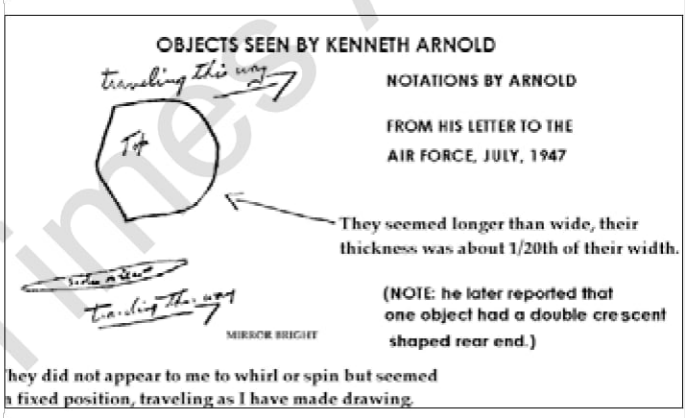

Figure 2. Kenneth Arnold's notations on the sighting.

The Case of Arnold's Sighting

The June 24, 1947, sighting by private pilot Kenneth Arnold[3] was not really the first recorded UFO sighting. However, it was the first sighting to be publicly reported and it attracted worldwide interest. It also attracted more than its share of explanations. Mr. Arnold, a businessman and private pilot with over 4,000 hours of flying experience, had reported seeing nine semicircular, thin (compared to the length), shiny objects in a line flying southward past the western flank of Mt. Rainier; they "swerved in and out" of a chain of 6,000 foot high mountain peaks south of Rainier (Figure 1). The objects (Figure 2) were therefore about twenty miles east of him (he was about twenty miles west and ten miles south of Mt. Rainier and flying east at the time). He timed their flight from Rainier, southward, to Mt. Adams, a distance of about fifty miles. They crossed this distance in 102 seconds. Hence, the direct interpretation of Arnold's sighting is that these objects were traveling at about 1,700 mph. (This was about four months before Yaeger exceeded the speed of sound in a test aircraft, in October, 1947). In reporting the speed calculation, Arnold arbitrarily reduced the speed considerably to account for possible errors in his measurements. He publicly stated that the objects were traveling at about 1,200 mph. Arnold reported that he first saw the objects as they flashed or reflected the bright afternoon sunlight when they were north of Mt. Rainier and last saw them (by their flashes) as they passed Mt. Adams. The total sighting duration was two and a half to three minutes.

Shortly after Arnold's sighting and during the massive wave

New Energy Times Archive

of sightings that occurred between late June and the middle of July of 1947, numerous explanations were proposed. The first explanation was proposed by Arnold himself, namely that the saucers were some new secret aircraft of the United States Army Air Force (the Air Force was still part of the Army). However, within days after Arnold's sighting the U.S. government publicly denied having any secret aircraft that could account for saucer sightings. General George Schulgen of the Army Air Force privately denied this to J. Edgar Hoover, the Director of the Federal Bureau of Investigation (FBI). (The denial is in the FBI's file on flying discs, the real "X-File.") On the other hand, the Air Force began to worry over the possibility that the Soviet Union had developed flying saucers to threaten the United States,[4] but this worry was not conveyed to the public.

Howard Blakeslee, the Associated Press Science Editor, wrote an article that suggested "quirks of eyesight" could explain the saucer mystery.[5] He pointed out that anything looks round if it is too far away to see details. "This law covers small things seen nearby and large ones at great distances." He described his own sightings of "flying saucers" which were bright reflections from distant aircraft. "Planes at great distances tend to look round when light is reflected from their sides," he wrote. He rejected the daytime meteor hypothesis and the hypothesis that upper altitude ice crystals formed "little round clouds." According to Blakeslee, "Nothing published in science or atomic studies gives the slightest clue to flying saucers unless the objects are aircraft."

Dan Nelson, an attorney in Oklahoma City, published his explanation in the *Daily Oklahoman* newspaper, July 29, 1947.[7] On July 30 the FBI contacted him to learn more about his solution to the mystery. According to Nelson all sightings from inside vehicles with windows, including airplanes, were reflections of sunlight from shiny objects onto the windows. The light reflected from these shiny objects was then re-reflected toward the eye of the observer looking through the window. The reflection was silhouetted against the background as if there were a shiny object "out there," far outside the vehicle. Naturally, reflections such as this could do unnatural things such as pace a vehicle or suddenly accelerate, make fast turns, and even suddenly disappear. According to Nelson, the vibration of a car, for example, would give the objects "an appearance of rotating" and "reflections [in the windows] caused them to appear flat or saucer shaped." Moreover, ". . .any number of objects might be seen according to the direction that the car is traveling and the number of bright objects being reflected onto the window. He further stated that these objects might be seen in an ordinary window in a house according to the lighting conditions. . ." Mr. Nelson told the FBI that he had not actually talked to saucer witnesses but "he believed that these reflections plus the excitement and hysteria caused by other reports has been the basis for most flying saucer reports." Nelson's explanation could not apply to Arnold's sighting, but Nelson didn't know that since Arnold's full report was not published until many years later.

In June 1997, just in time for the fiftieth anniversary of Arnold's sighting, *San Francisco Examiner* science writer Keay Davidson published another explanation: meteors.[8] The details of the explanation are given in a small monthly publication by Klass, which he calls the *Skeptics UFO Newsletter*.[9] (One wonders why it took fifty years for this explanation to be proposed. Could it be that previous skeptics considered this to be just too "outrageous?")

Klass' *SKUFON* article mentions Arnold's statement that the objects seemed bright and shiny as if reflecting the Sun. By way of comparison and explanation, Klass cites a 6:00 p.m., June 5, 1969, pilot sighting in order to point out that meteors, when seen in the daytime, can look as if they are shiny metal. These pilots saw the bright objects seeming to come toward them (*i.e.*, they were looking along the trajectory of the objects) and thought they were looking at shiny metallic objects. The pilots thought the objects were close, when in fact they were over a hundred miles away.

Klass also points out that any pilot can make errors. The implication is that if the 1969 pilots could mistake daytime meteors for UFOs, then perhaps Arnold did also. However, the Arnold sighting was quite different from the 1969 sighting.

By way of contrast, meteors, which are traveling fast enough to glow (or, actually, to cause the air around them to glow), do not dim to the point of being "not bright" and then brighten again, repeatedly. This is because, as Klass correctly points out, what causes the light is the high velocity of the meteor passing through atmosphere. The meteor is traveling so fast that it "instantaneously" heats the air as it passes through. (Note: Klass gives a meteor speed as 10,000 mph or 2.8 mi/sec. However, this is lower than that of any body entering the earth's atmosphere from space. Free fall to the earth from a great distance would produce a speed of about 7.4 mi/sec at the earth's surface in the absence of atmosphere. Orbital speed, which is lower than meteoric speed, but still large enough to cause a plasma in the upper atmosphere, is about 5 mi/sec.) This heating is a very rapid process caused by the meteor compressing the air ahead of it and raising the temperature (kinetic energy of the air molecules) to the point where the air becomes ionized (a plasma). In returning to the un-ionized state (free electrons reuniting with the atoms/molecules) the atoms/molecules give off light, which appears to envelop the meteor (one does not see the meteor itself, but rather the envelope of heated air). The natural tendency of a meteor is to slow down as it meets with resistance, while forcing itself at high speed through the atmosphere. If it slows to a speed low enough so that it no longer creates a plasma, it will become dark (not giving off light) and will not again appear bright, since there is no way for it to regain its lost speed. At the high altitudes of meteors (fifty miles and higher), the atmosphere is quite thin and easily heated to the plasma state by the speed of the meteor. Furthermore, the air resistance is quite low, so the meteor can travel a great distance before being slowed to "sub-plasma" speed. However, as the altitude decreases, the atmospheric density increases and it takes ever more energy from the meteor to maintain a glowing plasma. It is doubtful that any meteor would be still glowing at an altitude of 6,000 feet, but if it were, it would be quite large and eventually would be slowed to the point of hitting the earth. The suggestion that one, or several, meteors could travel many miles horizontally at a speed high enough to glow while at an altitude of 6,000 feet is not supported by any known physics of meteors.

Klass points out that Arnold estimated he saw the objects for two and a half to three minutes. This includes about half to three-quarters of a minute before they passed Mt. Rainier and another nearly two minutes after they passed Rainier. This would be "extra long" for a meteor. Most meteors burn out (at high altitude) in a second or so, although large meteors, called fireballs, can be seen from one location on the earth for many seconds up to a minute. Since meteor durations are limited to a minute or less, Klass argues that Arnold's time estimate was probably wrong. He points out that "witnesses are notoriously unreliable in estimating the time duration of unexpected events" and cites the March 3, 1968, reentry of the Zond Soviet space rocket as an example in which witness errors resulted in sighting duration estimates as low as fifteen seconds and as high as five minutes.

There is an important difference between Klass' example of witness error and the Arnold sighting: Arnold used a clock!

The calculated speed based on Arnold's measured time between Rainier and Adams is by itself sufficient to reject the meteor explanation. (Is this why Klass did not report the calculated speed?) The objects traveled about fifty miles in 102 seconds, corresponding to a speed of about 1,700 mph, far below any meteoric speed and certainly not enough to make the atmosphere glow.

By way of comparison, if one were to hypothesize a meteor in a level trajectory traveling at essentially orbital speed but at an

New Energy Times Archive

altitude of 6,000 feet, it would have required only roughly ten seconds to travel from Mt. Rainier to Mt. Adams. Even at Klass' underestimated speed of 10,000 mph, the flight time between the peaks would be only about seventeen seconds. One would hope that Arnold, using his dashboard clock, could tell the difference between 102 seconds and ten (or seventeen) seconds.

Aside from the difficulty in imagining that Arnold could mistake ten seconds for 102 seconds, the mere suggestion that a meteor, or nine such meteors, could travel at meteoric speed at an altitude of 6,000 feet while glowing brightly is far outside the accepted meteor phenomenology. Meteors cool as they penetrate the lower atmosphere, or rather the speed decreases to the point that they are no longer ionizing the dense air. Hence, the basic concept that Arnold saw bright meteors traveling past Mt. Rainier must be rejected.

Consider now the number of explanations that have been offered for the Arnold sighting: secret U.S. aircraft,[3] secret Soviet aircraft,[4] quirks of eyesight,[5] red corpuscles of blood in front of the retina,[6] reflections in glass,[7] meteors,[8] American Air Force aircraft,[10] blasts of billowing snow from Mt. Ranier,[11] reflection from a moving haze layer,[11] mountain top mirage,[12] orographic clouds,[12] wave clouds in motion,[12] water drops on the airplane window,[12] and geese[14] or pelicans.[15] The complete Arnold sighting and an in-depth discussion of these failed prosaic explanations are available from this author via email.

From studying the approach of the skeptics to explaining the Arnold sighting, one learns Maccabee's First Rule of Debunking: any published explanation is better than none. The Second Rule is: if the first explanation seems unconvincing or just plain doesn't work, publish another. The Corollary to the Second Rule is (you guessed it!): if that doesn't work try yet another.

The procedure of proposing explanations is part of the scientific approach to explaining UFO sightings. However, simply proposing explanations is not sufficient. It is the "first half" of the method. The other "half" of the method is to test each proposed explanation against the information from the sighting and to decide whether or not it is, at least, convincing (you may not be able to determine whether or not an explanation is correct, but it is possible to determine whether or not it is convincing). Unfortunately, Menzel, Klass, and other skeptics generally have not carried out this second half of the scientific method. Menzel simply proposed explanations, one after another, as if it were logical to believe that the more prosaic explanations one could offer for a sighting, the more likely it is that the sighting could be (or has been) explained by one of the explanations. This, of course, makes little sense. Each sighting has one and only one explanation. Thus the analyst should pick the best or most convincing explanation out of a collection of potential explanations (by using the complete scientific method on each sighting and rejecting the unconvincing ones) and then publish that explanation and only that explanation. As a rule of thumb to help the reader decide whether or not a sighting has been explained, I would suggest that the larger the number of proposed, unconvincing explanations, the less likely it is that the sighting has been explained.

The Fantastic Flight of JAL 1628

Klass followed the scientific procedure when he published his analysis of the Val Johnson case discussed above. Klass clearly stated that the only prosaic explanation was a hoax by Officer Johnson, all others having been rejected by the testimony and the hard evidence. He then left it up to the reader to decide whether or not he had made a convincing case for it being a hoax. However, he did not follow the scientific method in his attempt to justify the meteor hypothesis for the Arnold sighting, nor in his analysis of the following sighting that occurred in 1986.

Japan Airlines Captain Kenju Terauchi had been mildly interested in UFOs for years, but didn't get to see one close-up until November 16, 1986. He and two other crew members were flying a 747 jumbo jet (designated JAL 1628) that was transporting a load of wine from Paris to Tokyo, when suddenly, while over northeastern Alaska, they were confronted with a startling event: the appearance of two objects or "crafts" right in front of their aircraft. These objects suddenly appeared and maintained a fixed distance, estimated at 1,000 feet, ahead of their aircraft for about ten minutes (they were flying at 35,000 feet at about 600 mph). The captain reported that he felt the sudden occurrence of heat on his face. Each object had two parallel vertical rows of yellowish lights that appeared like exhausts emitting flames. Initially the objects were one above the other, but after several minutes they suddenly moved to a side-by-side orientation. Each object rocked from side to side, and the rocking of the two objects was synchronized. They were not recognized as any known aircraft by the crew, which reported the event to the Anchorage, Alaska, Air Route Traffic Control Center (ARTCC). The ARTCC tracked the airplane on radar and tried to detect the objects but was unable to do so. About ten minutes after their initial appearance, these "crafts" suddenly disappeared from ahead of the airplane. Within seconds of the disappearance, the captain noticed a strange light, like a long narrow fluorescent glow, to the left side of the airplane, quite a distance away. He turned on his airplane weather radar and noticed a large radar return about eight miles away in the direction of the faint glow. As the plane flew southward, this light drifted behind the aircraft. Suddenly, a lot more of it became visible (by self-glow or by silhouette) and the captain referred to it as a "gigantic spaceship." This caused the captain to request a decrease in altitude to get away from it. At the same time the ARTCC requested that the plane make a circle to see what was behind it. Nothing was seen, but a radar target was detected momentarily behind the aircraft. Subsequently the aircraft was flying southward toward Anchorage when the captain last saw the "gigantic spaceship" far to his left and behind him, that is, roughly north of the aircraft.

The most complete report of this sighting ever published, along with analysis and a discussion of the proposed explanations, is presented in the article entitled "The Fantastic Flight of JAL 1628," which appeared in the May-June, 1987 issue of the *International UFO Reporter* (IUR), published by the Center for UFO Studies (www.cufos.org). An email (text) version (without nice illustrations) is available from the author. The information above is a very shortened version of the sighting, but it contains enough information to allow a proper evaluation of the "prosaic explanations" proposed and publicized by the Committee for the Scientific Investigation of Claims of the Paranormal (CSICOP). The sighting occurred in November, 1986. The Federal Aviation Administration announced in early January 1987 that it was going to investigate the sighting because of all the press interest. (This is anomalous by itself since, so far as I know, the FAA had never investigated any sighting before.) Less than a month later, and more than a month before the FAA announced the results of its investigation, CSICOP announced that the sighting had been explained.[12]

The press release stated that, "According to a leading UFO investigator (Philip J. Klass) at least one extraterrestrial object was involved—the planet Jupiter, and possibly another—Mars." The press release asserted that at the time of the sighting Jupiter was "extremely bright" at a -2.6 magnitude and would have been about 10° above the horizon on the left side of the aircraft where the pilot first reported seeing the UFO. Mars would have been slightly lower and about 20° to the right of Jupiter. According to the press release, "Although the very bright Jupiter and less bright Mars had to be visible to JAL Capt. Kenjyu Terauchi, the pilot never once reported seeing either—only a UFO that he described as being a 'white and yellow' light in his initial radio report to the Federal Aviation Administration controllers at Anchorage."

The press release could have mentioned, but did not, that Terauchi did report seeing numerous stars in the sky, city lights,

New Energy Times Archive

and a glow of sunset in the west.

The CSICOP explanation was based mostly on Klass' interpretation of an early version of the transcript of the audio tape made at the Anchorage ARTCC. The radar tracking data were not made available until over a month later, so Klass had no information on the precise locations and flight directions of the plane at the times of the various sighting events. Therefore, he couldn't prove that Jupiter and Mars were in the locations or sighting directions (relative to the airplane) that he stated in the press release. On the other hand, there were rather explicit descriptions and drawings by the captain which had been widely publicized and which certainly were available to Klass.

Klass made a major error in not waiting for the release of the complete information package by the FAA. If he had waited, he would have found that the publicized versions of the sighting were quite close to the descriptions of the "crafts" that were given by the crew during interviews. These descriptions rule out Jupiter and Mars as possible causes of the sighting. Without the FAA data package he did not know that initial drawings were made only about two hours after the event. Nor did he know that the other crew members, in separate interviews, supported the captain's report of the objects that appeared in front of the plane. Nor did he know that at the beginning of the sighting the two crafts were almost directly ahead of the plane and not in the direction of Jupiter and Mars. Nor did he know about the sudden rearrangement of the relative positions of the objects from one above the other to one beside the other, a maneuver that Jupiter and Mars would have difficulty carrying out during the time of the sighting! Nor did he know that at the end of the sighting, while the plane was flying southward, nearly toward Jupiter and Mars, that the pilot reported the "gigantic spacecraft" was behind and to the left, in a direction nearly opposite to the direction of the planets.

The CSICOP press release discussed and rejected the FAA and Air Force radar detections. Curiously, however, it completely ignored the claim by the pilot that the airplane radar did detect a radar-reflective object at seven to eight miles in the direction of the UFO. Perhaps Klass rejected this claim, but if he had waited for the data package from the FAA, he would have learned that the other two members of the crew confirmed the pilot's statement about the radar detection.

Thus, the Jupiter-Mars explanation is contradicted by the sighting directions to the UFO at various times, by the descriptions of the crew members, and by the airplane radar detection. Unfortunately, the press did not know that at the time. The explanation was widely publicized.

The FAA finally did make a public report on the sighting on March 5, 1988.[17] This report concentrated on the controversy over the radar detections or non-detections by the ARTCC. It did not discuss the airplane radar detection nor did it discuss the visual sightings. It basically said that the ground radar did not support the claim of a sighting. This was not, of course, the same as saying there was no sighting, but the national press presented the FAA investigation results as if they proved there was no sighting.

The most important result of the FAA investigation was a data package which the FAA made available. This included radar data listing the exact airplane locations, headings, and speed; the complete transcript of the ARTCC audio tape of the event; and all the transcipts of the interviews with the crew members and air traffic controllers. With this data package anyone could have analyzed the sighting and concluded that Mars and Jupiter were not the solution.

Apparently that is exactly what Klass did after my detailed article was published by the Center for UFO Studies, because several months later CSICOP published another explanation (recall the corollary to Maccabee's First Rule of Debunking mentioned above). This time it was moonlight on clouds![18] Since the moon was low in the eastern sky, Klass argued that the "crafts" were explained as reflections of moonlight from the clouds and "turbulent ice crystals." According to Klass, the turbulent ice crystals "could have generated flame-colored lights" (he didn't explain how) and "this would also explain why the undulating lights would periodically and suddenly disappear and then reappear as cloud conditions ahead changed. When the aircraft finally outflew the ice clouds and the initial 'UFO' disappeared for good (the Captain) would search the sky for it, spot Jupiter further to the left and conclude it was the initial UFO." Klass attributed the airplane radar sighting to "an echo from thin clouds of ice crystals."

Klass' explanation verges on scientific garbage. Although the crew reported there were thin clouds far below the plane, there is no reason to suppose that moonlight reflected off ice crystals in these clouds would generate "flame-colored lights." Klass' explanation certainly could not account for the heat which Terauchi felt on his face. Nor would it explain the peculiar parallel arrays of flames or yellowish lights associated with two independently flying objects that appeared ahead of and above the plane, continuously for many minutes. Nor would it explain the sudden rearranging of these arrays of lights. According to Klass, the reflection from crystals could explain the colors of the lights. However, the reflected light would be basically the color of the moonlight. A variation in color would occur only if the moonlight were "broken" into its spectrum by refraction of light in the crystals (similar to what happens with rain and a rainbow). But the spectrum of white light contains more than just the yellow, amber, and green which were reported. Blue and red should also have been noted if the air crew were looking at what would essentially be a "rainbow."

The lights ahead of the aircraft were described as bright. The copilot compared them to headlights of oncoming aircraft. A reflection of the moon from thin clouds would cover large areas of cloud and would be dim, diffuse, or "patchy," but not point-like.

Klass' explanation for the airplane radar target is total conjecture on his part since the clouds were reported by the crew to be thin. Would there be any return at all from such clouds? One might ask, "If there were so many clouds, why didn't the radar pick up numerous 'blobby' returns on the right side and ahead of the aircraft as well as on the left where the 'gigantic spaceship' appeared to be?" And, of course, Klass' explanation does not account for the appearance of a "gigantic spaceship."

The bottom line is that Klass proposed two prosaic explanations for this sighting but neither explanation was correct. Each one failed for physical reasons when compared with the information in the sighting report. The fact that he was able to propose seemingly reasonable prosaic explanations was valuable from the standpoint of publicity for the skeptical viewpoint and debunking sightings, but it was useless from the point of view of scientific analysis of UFO sightings. This sighting, along with those of Officer Johnson and Kenneth Arnold, remain unexplained and, in my opinion, will remain unexplained.

The Case of the Flashing Triangle

It is rare when the physics of the physical evidence in a sighting absolutely proves a prosaic explanation to be wrong. If there is physical evidence associated with a UFO sighting, its value or pertinence is generally disputed by the skeptics, who find some justification for ignoring the physical evidence and thereby removing an impediment to accepting the proposed explanation. However, in the case I am about to discuss the physical evidence stands on its own and *must* be explained if the sighting is to be rejected as evidence for the ET or OI/NHI hypothesis.

During the early morning of December 31, 1978, there were a series of sightings off the east coast of South Island, New Zealand. These sightings made news around the world. While flying on a freighter aircraft loaded with newspapers, a TV news crew saw and filmed strange lights which, in the opinion of the experienced air crew (pilot, copilot), were extraordinary. An email version is available from the author. The published article

New Energy Times Archive

presents the in-depth analysis of all the images in this section of the movie film.[19] It is sufficient for this discussion to describe only those few images which are of particular interest here.

The TV news cameraman used a large Bolex electric camera with a telephoto lens. He held this camera on his shoulder because there was no room on the flight deck for a tripod. The flight deck has windows at the front and sides positioned so that the fields of view of the pilot and copilot, added together, is somewhat more than 200° from left to right (the pilot sits on the left side of the cockpit, the copilot on the right). The cameraman sat in a seat between and slightly behind the pilot and copilot and therefore had a field of view of less than 180°. This is important to understand, because from his position he could not film the right wing of the aircraft without placing his camera lens directly in front of the copilot or sitting in the copilot's seat.

At 2:51 a.m., near the end of the flight of the Argosy freighter aircraft from Christchurch to Blenheim, the Wellington Air Route Traffic Control Center (WARTCC) announced to the crew that there was a large radar target north-northwest and about twenty miles ahead of them. They were about twenty miles east of the coast, approaching Cape Campbell, at the northeastern "corner" of South Island, at the time of the radar report. The air crew and the news crew recall seeing a light appear ahead of the plane and the news reporter on board recorded a statement about seeing a flashing light "like an aircraft beacon" that suddenly dropped downward and started "rolling and turning." He also said that he could see "orange and red among the lights." This all appeared to be happening in the sky above the land or ocean near the northeastern area of South Island.

Although it is impossible to prove from direct evidence that the cameraman filmed this same light (because there was no synchronization between the filming and the audio tape), it can be proven that this section of his film was taken in the same time frame. Moreover, the film does, indeed, show a flashing light which cannot be identified with any known light in the area. Its flash rate is about once per second.

The movie camera created a series of pictures, called "frames," which recorded the images of the light, one after another, at a rate of about ten frames (ten pictures) per second. (The cameraman intentionally slowed the frame rate from the normal twenty-four frames per second in order to be sure that he got good exposures of the images.) Looking frame-by-frame through the 279 frames of the flashing light, one finds that there are about ten frames per cycle of the flash (nearly thirty cycles are on the film). During each cycle the images start large and white or very pale yellow (overexposed) and they shrink in size and brightness to dim combinations of red and yellowish-orange and then increase in brightness and size back to large and white. It is of importance, for comparison with the proposed prosaic explanation, to note that the overexposed images have *no* trace of red associated with them.

Philip Klass devoted three chapters of his book[1] to the famous New Zealand sightings. He proposed numerous prosaic, though in my opinion wrong, explanations for the lights seen and filmed and for the radar targets which were reported during the flight of the aircraft, first southward from Wellington to Christchurch and then northward from Christchurch to Blenheim. In Chapter 27 he discussed the section of film which is of interest here. Klass described the flashing light in the film as follows:

> . . .a light that fluctuates rapidly from dim red-orange to a bright white, then back to red-orange, then back to bright white at approximately the flash rate of the red-orange anti-collision beacons installed atop and beneath the Argosy's fuselage.

Here Klass refers to red, not red-orange, rotating beacons on the top and bottom of the aircraft. These beacons project narrow beams of light that rotate around and appear as red flashes to a distant observer. These beacons were captured on film by the cameraman before the flight began. He set up his camera on a tripod while the plane was still at the airport and filmed the plane as the engines were warmed up in order to "run in" his camera. The images of these beacons show that when the light is pointed at the camera and is, therefore, brightest, the image is overexposed and consists of a yellow central circle surrounded by a wide, red annular region, *i.e.*, a red ring around a yellow center.

Noticing that the flash rates of the upper beacon and the light on the film were, for all practical purposes, equal, Klass proposed that the flashing light on the film was actually the upper beacon. How could this have been done since there was no way the cameraman could directly film the beacon from inside the aircraft? Klass writes:

> . . .[the cameraman] would not have been able to film the topside beacon directly. But its intense illumination could have been reflected off one of the aircraft's rotating propeller blades when the beacon rotation rate and the propeller speed were roughly 'synchronized.' Such synchronization would have occurred when [the captain] began to throttle back for his descent [into Blenheim], possibly increasing the propeller pitch angle. A short time later, when he throttled back further, the requisite synchronization would have been lost and the [UFO image] would mysteriously disappear.

The images on the film vary considerably in shape and size from frame to frame. Klass offered the following explanation of the image shape changes:

> If [this section of film shows] a reflection of the beacon from the curved surface of the propeller blades, whose rotation rate was not perfectly synchronized with the rotating topside beacon, it readily explains the remarkable changes in shape, size, and appearance of the [UFO] images that occur in a fraction of a second.

The actual explanation for the shape change is straightforward and has nothing to do with a hypothetical temporary synchronization of the beacon and the propeller rotation. Since the cameraman supported the camera on his shoulder in a moving, vibrating airplane most of the images were smeared by camera motion. However, some images were either not smeared or were smeared very slightly. This is because the camera pointing direction vibrated about some average position. Each time the image moved away from the center of the film the cameraman would twist the camera to recenter the image. The image would reach a maximum distance from center and then the image motion would momentarily cease before the direction reversed and the image moved back toward the center. Therefore, the frames obtained during moments of direction reversal, the "stationary frames," contain images that were not smeared or smeared very little. The brightest white images in these stationary frames are circular or nearly circular. The white and red-orange images that occur between stationary frames were stretched by the camera motion into "hot dog" shapes (elongated). The stationary frames which contain the dimmest, smallest images show a very unique arrangement of lights: a triangle consisting of an orange "dot" image just above two side-by-side red "dot" images.

Klass points out in his book that I rejected his hypothesis that the UFO image could have been a result of filming the reflection off the propeller of the beacon. Unfortunately, however, he did not describe my objections to his hypothesis even though he should have known what they were because of our extensive discussions of this sighting in numerous letters long before he wrote his book.

My first objection is not based on physics but on the fact that the cameraman, from his middle seat, could not have filmed in the direction of the propeller without putting his camera in front of the copilot or sitting in the copilot's seat, and neither the cameraman nor the copilot recall either such event.

The second objection is based on fundamental physics (optics/photography) and is, in fact, devastating to Klass' "prosaic explanation." (As mentioned above, I made him aware of

New Energy Times Archive

this objection but he did not include it in his book.)

The clues have already been given and the astute reader may have already deduced the second objection. It is most evident in the comparison of the bright, overexposed UFO images with the bright, overexposed beacon images. As I stated above, the cameraman filmed the red flashing upper (and lower) beacon before the plane took off. The film shows that when the beacon was pointed toward the camera the images were relatively large and consisted of a yellow central circular area surrounded by a wide red annular region. The yellow center is caused by overexposure to the extent that the film cannot produce the correct color (it produces pale yellow rather than red because more film color layers than just the red-producing layer have been exposed by the extreme intensity of the light). The red annular region is a result of light scattering sideways in the film. As the light scatters sideways from the extremely bright central region of the image, the intensity decreases to a level at which the film can produce the correct color, in this case, red. (Example: had the light been green there would be a pale center with a very green annulus around it.)

This is completely different from the brightest images on the UFO film, however. A careful examination of the overexposed images shows that the centers are white or very pale yellow and there is *no* red annular region. That means that these images were absolutely *not* made by filming a red light, whether directly, as by having the camera film directly toward the beacon, or indirectly, such as by reflecting the beacon light off the rotating propeller blades. (There is another optical/photographic reason for rejecting the "propeller-reflected-light" hypothesis: a reflection off propeller blades would be extremely weak because the blades do not "fill up" the space. After all, propeller blades "disappear" and you can "see through them" when they are rotating rapidly. Any reflection under such circumstances would be extremely weak and diffuse and very unlikely to cause any overexposed images.)

Hence Klass' explanation is rejected for perfectly good physical reasons. (Note: a TRue UFO might be able to violate physics as we know it, but known objects such as beacons, cameras, and film cannot violate physics as we know it. The previous argument against the beacon hypothesis is based on well-known optical physics.)

The logical, skeptical response to the absolute rejection of this explanation would be, of course, to propose another explanation. Since the airplane was flying many miles off the east coast of South Island, and since there were beacons along the shore, the first logical suggestion would be that the film shows one of these beacons. The cameraman said he was certain that he had not filmed a beacon. He said that whenever he saw a light which he couldn't identify he asked the pilot or copilot to identify it. The air crew was, of course, familiar with the beacons in the area and told the cameraman which lights were beacons. The statement by the cameraman is supported by a comparison of the film images with known beacons. Careful analysis of the film indicates that the source of the images was a triangular arrangement of lights consisting of a pale yellowish-orange light that pulsated at about 1 Hz, which was above two pulsating side-by-side red lights. The intensity of the upper light ranged from effectively zero (no image) to such a large value that it overexposed the film. The red lights also pulsated at 1 Hz, but in the opposite phase: when the upper light was at zero brightness the red lights were maximum, and vice versa. The red lights never got bright enough to overexpose the film. Using information supplied by the New Zealand government, a search was made of all the beacons within about fifty miles of the aircraft. None of the beacons had a triangular arrangement of lights. Moreover, all the beacons were found to be too weak, too far away, to have the wrong flash period, or the wrong color. There is no beacon that could account for the film.

Yet another logical suggestion would be another aircraft. However, there were no other aircraft flying in that area of New Zealand at the time, according to the air traffic controller who was monitoring the Argosy flight to Blenhiem.

The possibility that the film showed light from a boat was considered. There are no flashing lights such as this on boats (which have steady lights that do not change color). The only boats with lights bright enough to make overexposed images at long distances are squid fishing boats. They use very bright incandescent lights to lure squid to the surface at night for netting. The Japanese squid fleet was in New Zealand waters at the time, but their lights are steady and only white.

Yet another suggested explanation is that there was an emergency vehicle or police car with its lights flashing on the land closest to the airplane. Aside from the fact that emergency vehicles do not carry lighting of the type that would create images such as this, the pilot checked with the authorities and was told that there were no emergency or law enforcement vehicles traveling the New Zealand highways and byways near the location of the plane at the time.

Another suggestion was that a light inside the aircraft was filmed. However, this suggestion was rejected because there were no flashing lights inside the aircraft and, furthermore, the captain had turned off all the cockpit lights, leaving only steady, dim red meter lights on the control panels.

As a last resort one might propose a distant bright planet on the horizon, fluctuating in brightness and color as a result of random atmospheric refractions. However, such fluctuations would not be perfectly steady and furthermore, Venus, the only astronomical light source bright enough to produce images remotely like these, was not visible at the time.

Now you know the reason that Klass proposed the upper beacon explanation: he was aware, from our considerable correspondence on this sighting, that all the other explanations had failed. The only remaining light that had a remote chance of explaining the sighting was the upper beacon, because of the near equivalence of the flash rate. Then Klass had to propose an auxiliary hypothesis to explain how the beacon could be filmed from inside the aircraft by reflection off the propeller. This was very clever, but unconvincing to the experienced optical physicist. But the final rejection of his hypothesis is based on the images of overexposed red lights as described above.

Without any other known sources of light to create the film images, this has to be considered unexplained and I know of no reason to believe that it will eventually be explained. It is a TRue UFO. If we assume that the lights which made these images were part of the object detected by radar at 2:51 a.m., at a distance of about twenty miles ahead of the airplane, then quantitative estimates can be made of the intensity and spacings of the lights (see Reference 1 for details of the calculations). From the spacing of the "dots" in the triangular images (orange "dot" above to side-by-side red "dots") one can calculate that the red lights were about fifty feet apart and the yellow-orange light was about ninety feet above the red lights. (Note: The calculated spacing is proportional to the distance assumed. If the lights were closer, the spacing was less.) At its peak brightness the intensity of the upper light was considerably over a million candlepower. It was as if a powerful, pulsating spotlight had been pointed toward the witnesses on the airplane.

Conclusion

The few sightings discussed here are important because they illustrate the problem faced by skeptics who would argue that, because there are prosaic explanations for all sightings, there is no evidence for ET/NHI/OI contact. The problem faced by the skeptics is that there are sightings for which the generally accepted (by skeptics!) prosaic explanations are wrong or at least unconvincing. The failure of UFO skepticism, from the scientific point of view, has been to allow such explanations to be accepted by the scientific community. If UFOs were "ordinary science," the proposed explanations would have been rigorously analyzed, and probably rejected, rather than simply accepted. Scientific ufology

New Energy Times Archive

needs skeptics, but skeptics who are capable of recognizing when a sighting simply cannot be explained by any prosaic explanation.

References

1. Klass, Philip J. 1983. *UFOs: The Public Deceived*, Prometheus Books, Buffalo, NY, 297.
2. *Ibid.*, 223.
3. Arnold, K. 1947. Letter to the Air Force, *Project Blue Book Microfilm File*, National Archives.
4. U.S. Air Force Intelligence. 1948. *Analysis of Flying Object Incidents in the U.S.*, Report Number 100-203-79, National Archives.
5. Blakeslee, H. 1947. "Quirks of Eyesight May Explain Disc Mystery," *Associated Press*, July 6.
6. *New York Times*, July 8, 1947.
7. Nelson, D. 1947. "Flying Saucer Mystery Solved," *Flying Disc File of the Federal Bureau of Investigation* (FBI), July 30.
8. Davidson, K. 1997. "Did Kenneth Arnold See Meteors?" *San Francisco Examiner*, June 24, 1997.
9. *SKUFON*, **46,** July 1997.
10. Hynek, J.A. 1949. "Incident #17, Mt. Rainier, Washington, June 24, 1947," *Project Grudge Final Report*, National Archives.
11. Menzel, H. 1953, *Flying Saucers*, Harvard University Press, Cambridge, Massachusetts.
12. Menzel, H. and Boyd, L. 1963. *The World of Flying Saucers*, Doubleday, New York.
13. "UFO Mystery Solved," press release by CSICOP on January 22, 1987, Buffalo, NY.
14. Kottmeyer, M. Private communication.
15. Easton, J. Private communication.
16. Menzel, H. and Taves, E. 1977. *The UFO Enigma: The Definitive Solution*, Doubleday, New York.
17. Steucke, P. 1987. "FAA Releases Documents on Reported UFO Sighting Last November," Office of Public Affairs, Alaskan Region, Federal Aviation Administration (FAA), U.S. Department of Transportation, March 5, Anchorage, AK.
18. Klass, P.J. 1987. "FAA Data Sheds New Light on JAL Pilot's UFO Report," *The Skeptical Inquirer*, Summer, Buffalo, NY.
19. "Analysis and Discussion of the Images of a Cluster of Periodically Flashing Lights Filmed Off the Coast of New Zealand," *Journal of Scientific Exploration*, **1,** 2, 1981, 149.

About the Author

Bruce Maccabee has been active in UFO research since the late 1960s. He has a Ph.D. in physics from The American University in Washington, D.C. and has carried out physics research for the Navy since 1972. His work has centered on high power lasers, underwater sound, and the Strategic Defense Initiative (now referred to as Ballistic Missile Defense). His UFO investigations, which are not related to his Navy work, have included the Kenneth Arnold Sighting; McMinnville, Oregon (Trent) photos of 1950; the Gemini 11 astronaut photos of September 1966; the New Zealand sightings of December 1978; the Japan Airlines (JAL 1628) sighting of November 1986; the numerous sightings of Ed Walters and others in Gulf Breeze, Florida, 1987-1988; the "red bubba" sightings, 1990-1992; the Mexico City video of August 1997; and many others. He has also done historical research and was the first to obtain the "flying disc file" of the FBI (the real "X-Files!").

He has published nearly one hundred articles in UFO journals and elsewhere over the last twenty years, including many which appeared in the *MUFON Journal* and *MUFON Symposium* proceedings. He is co-author, with Ed Walters, of the book *UFOs Are Real. . .Here's the Proof*, Avon, 1997. He has authored *The FBI-UFO Connection* (to be published by Llewellyn Publishing Co.). He has also appeared on numerous radio and television talk shows and in documentaries. He is a member of the major UFO organizations (Mutual UFO Network, Center for UFO Studies, Fund for UFO Research) and is the Maryland State Director for MUFON. He is also an accomplished keyboard musician and performed his composition "New Age Rising" (composed in honor of fifty years of UFO sightings) and several others at the 1997 MUFON Symposium.

*6962 Eyler Valley Flint Road, Sabillasville, Maryland 21780;
E-mail: brumac@compuserve.com

French Report on UFOs and Defense: An Overview

Gildas Bourdais

The following exclusive report first appeared as Part 1 of the August 1, 1999 edition of CNI News *(posted at the CNI News Website http://www.cninews.com/CNI_French.html) and is reprinted here with permission. Requests for translation and publication rights to the full report should be addressed to Michel Algrin, 25 Boulevard Saint-Germain, 75005, Paris, France.*

On July 16, 1999, a document was published in France called "UFOs and Defense: What Must We Be Prepared For?" This ninety-page report is the result of an in-depth study of UFOs covering many aspects of the subject, especially questions of defense.

The study was carried out over several years by an independent group of former "auditors" at the Institute of Higher Studies for National Defense (IHEDN) and by qualified experts from various fields. [NOTE: Many participants in IHEDN defense-study programs are known as auditors.—ed.]

Before its public release, it was sent to French President of the Republic Jacques Chirac and to Prime Minister Lionel Jospin. The report is prefaced by General Bernard Norlain of the Air Force, former Director of IHEDN, and begins with a preamble by Andre Lebeau, former President of the National Center for Space Studies, the French equivalent of NASA. The group itself, collective author of the report, is called "COMETA," which stands for "Committee for In-depth Studies," and is presided over by General Denis Letty of the Air Force, former auditor (FA) of IHEDN.

A non-exhaustive list of COMETA members is given at the beginning of the report. It includes General Bruno Lemoine of the Air Force (FA of IHEDN); Admiral Marc Merlo (FA of IHEDN); Michel Algrin, Doctor in Political Sciences, attorney at law (FA of IHEDN); General Pierre Bescond, engineer for armaments (FA of IHEDN); Denis Blancher, Chief National Police superintendant at the Ministry of the Interior; Christian Marchal, chief engineer of the national "corps des Mines," Research Director at the "National Office of Aeronautical Research" (ONERA) and General Alain Orszag, Ph.D. in physics, engineer for armaments.

The committee also expresses its gratitude to outside contributors, including Jean-Jacques Velasco, head of SEPRA at CNES; Francois Louange, President of Fleximage, specialist of photo analysis; General Joseph Domange of the Air Force, general delegate of the Association of auditors at IHEDN.

General Norlain tells in a short preface how this committee was created. General Letty came to see him in March 1995, when Norlain was Director of IHEDN, to discuss his project of a committee on UFOs. Norlain assured him of his interest and directed him to the Association of Auditors (AA) of IHEDN, which in turn gave its support. It is interesting to recall here that, twenty years ago, it was a report of that same Association which led to the creation of GEPAN, the first unit for UFO study, at CNES.

As a result, several members of the committee come from the Association of Auditors of IHEDN, joined by other experts. Most of them hold, or have held, important functions in defense, industry, teaching, research, or various central administrations. General Norlain expresses hope that this report will help develop new efforts nationally, and an indispensable international cooperation.

General Letty, as president of COMETA, points to the main theme of the report, which is that the accumulation of well-documented observations compels us now to consider all hypotheses as to the origin of UFOs, especially extraterrestrial hypotheses.

The committee then presents the contents of the study. In the first part, they discuss some remarkable UFO cases, both French and foreign. In the second part, they describe the present organization of research in France and abroad, and studies made by scientists worldwide which may bring partial explanations in accordance with known laws of physics. The main global explanations are then reviewed, from secret aircraft to extraterrestrial manifestations. The third part examines measures to be taken regarding defense, from information to pilots, both civilian and military, to strategic, political and religious consequences, should the extraterrestrial hypothesis be confirmed.

New Frontiers Archive

Part I: "Facts and Testimonies"

Many of the cases selected are well-known by most researchers, and need only to be mentioned here. [NOTE: a further description of the following cases is presented in a separate article below—ed.] They are:

- Testimonies of French pilots: M. Giraud, pilot of Mirage IV (1977); Colonel Bosc, fighter pilot (1976); Air France flight AF 3532 (Jan 1994).
- Aeronautical cases worldwide: Lakenheath, UK (1956); RB-47, USA (1957); Teheran, Iran (1976); San Carlos de Bariloche, Argentina (1995).
- Observations from the ground: Tananarive, Madagascar (1954); observation of a saucer near the ground by a French pilot, J.-P. Fartek (1979); close range observation over a missile site at Kapustin Yar, Russia (1989).
- Close encounters in France: Valensole, encounter of Maurice Masse (1965); Cussac, Cantal (1967); Trans-en-Provence (1981); Nancy (so-called case of the Amaranth, 1982).
- Counter-examples of elucidated phenomena (two cases).

Although the selection is limited, it seems sufficient to convince an uninformed but open-minded reader of the reality of UFOs.

Part II: "The Present State of Knowledge"

The second part, entitled "The Present State of Knowledge," surveys the organization of official UFO research in France, from the first instructions given to the "gendarmerie" in 1974 for the redaction of reports, to the creation of GEPAN in 1977, its organization, and its results: collection of more than 3,000 reports from the gendarmerie, case studies and statistical analyses. It then surveys agreements passed by GEPAN and, later, SEPRA, with the air force and the army, civilian aviation and other organs, such as civilian and military laboratories for the analysis of samples and photographs.

Regarding the methods and results, we are reminded of some famous cases (Trans-en-Provence, l'Amarante), and emphasis is directed to the catalogues of cases, notably of pilots (Weinstein catalogue), and "radar/visual," worldwide. A historical note appears here with a quotation of the famous letter of General Twining, of September 1947, asserting the reality of UFOs. [The reference is to a then-secret memorandum sent by U.S. General Nathan Twining to General George Schulgen, in which Twining states: "The phenomenon reported is something real and not visionary or fictitious. . . There are objects probably approximating the shape of a disk, of such appreciable size as to appear to be as large as man-made aircraft. . ." Twining notes the impressive aerial performance of these objects, their apparent metallic structure, and other characteristics often associated with UFO reports—ed.]

The following chapter, called "Hypotheses and Attempts at Modeling," discusses some models and hypotheses which are under study in several countries. Partial simulations have already been made for UFO propulsion, based on observations of aspects such as speed, movement and accelerations, engine failure of nearby vehicles, paralysis of witnesses, etc. One model is MHD [magneto-hydrodynamic] propulsion, already tested successfully in water, and which might be achieved in the atmosphere with superconducting circuits in a few decades. Other studies are briefly mentioned, regarding both atmospheric and space propulsion, such as particle beams, antigravity, reliance on planetary, and stellar impulsion. The failure of land vehicle engines may be explained by microwave radiations. In fact, high power hyperfrequency generators are under study in France and other countries. One application is microwave weapons. Particle beams, for instance proton beams, which ionize the air and become therefore visible, might explain the observation of luminous beams. Microwaves might explain body paralysis.

In the same chapter are next studied "global hypotheses." The authors regard hoaxes as rare and easily detected. Some non-scientific hypotheses are put aside, such as conspiracies and manipulations by powerful secret groups, parapsychic phenomena, and collective hallucinations. The hypothesis of secret [human] weapons is also regarded as very improbable. We are then left with various extraterrestrial hypotheses. One version has been developed in France by astronomers Jean-Claude Ribes and Guy Monnet, based on the concept of "space islands" of American physicist O'Neill, and it is compatible with present day physics.

The organization of UFO research in the United States, Great Britain, and Russia is surveyed rapidly. In the United States, the media and the polls show a marked interest and concern of the public, but the official position, especially of the Air Force, is still one of denial, more precisely that there is no threat to national security. Actually, declassified documents, released under FOIA, show another story, one of surveillance of nuclear installations by UFOs [this has occurred repeatedly in both the US and Russia — ed.] and the continued study of UFOs by the military and intelligence agencies.

The report stresses the importance in the United States of private, independent associations. It mentions the "UFO Briefing Document" [subtitled "Best Available Evidence" — ed.] sent in 1995 to a thousand personalities worldwide, and the Sturrock workshop in 1997, both sponsored by Laurance Rockefeller. The "Briefing Document" has obviously been welcomed by the authors of the COMETA report. The committee also notes the public emergence of alleged insiders such as Colonel Philip Corso, and considers that his testimony may be partly significant as to the real situation in that country, in spite of many critics.

The report describes briefly the situation in Great Britain, with a special mention of Nick Pope [civilian employee at Ministry of Defence, author of two books on UFOs — ed.], and poses the question of the possible existence of secret studies pursued jointly with American services. It mentions as well research in Russia, and the release of some information, notably by the KGB in 1991.

Part III: "UFOs and Defense"

The third part, "UFOs and Defense," states that, if it is true that no hostile UFO action has been proved yet, at least some actions of "intimidation" have been recorded in France (case of the Mirage IV for instance). Since the extraterrestrial origin of UFOs cannot be ruled out, it is therefore necessary to study the consequences of that hypothesis not only at the strategic level but also at political, religious, and media/public information levels.

The first chapter of Part III is devoted to prospective strategies ("Prospectives strategiques") and it begins with fundamental questions: "What if extraterrestrials? What intentions and what strategy can we deduce from their behavior?"

Such questions open a more controversial part of the report. Possible motivations of extraterrestrial visitors are explored here, such as protection of planet Earth against the dangers of nuclear war, suggested for instance by repeated flying over nuclear missile sites.

The committee then ponders the possible repercussions on the behavior, official or not, of different nation-states, and focuses on the possibility of secret, privileged contacts which might be "attributed to the United States." The attitude of the U.S. is seen as "most strange" since the 1947 wave and the Roswell event. Since that time, a policy of increasing secrecy seems to have been applied, which might be explained by the protection at all cost of military technological superiority to be acquired from the study of UFOs.

Next, the report tackles the question: "What measures must we take now?" At the least, whatever the nature of UFOs, they impose "critical vigilance," in particular regarding the risk of "destabilizing manipulations." A kind of "cosmic vigilance" should be applied by the elites, nationally and internationally, in order to prevent any shocking surprise, erroneous interpretation, and hostile manipulation.

Nationally, COMETA urges the strengthening of SEPRA, and recommends the creation of a cell at the highest level of government, entrusted with the development of hypotheses, strategy, and preparation of cooperation agreements with European and other foreign countries. A further step would be that European states and the European Union undertake diplomatic action toward the United States within the framework of political and strategic alliances.

A key question of the report is: "What situations must we be prepared for?" It mentions such situations as: extraterrestrial moves for official contact; discovery of a [UFO/alien] base within the territory of Europe; invasion (deemed improbable) and localized or massive attack; manipulation or deliberate disinformation aiming at destabilizing other states.

COMETA devotes special attention to "aeronautical implications," with detailed recommendations aimed at various personnels, such as air staffs, controllers, weathermen, and engineers. It also makes rec-

New Energy Times Archive

ommendations at the scientific and technical levels, aimed at developing research with potential benefits for defense and industry.

The report further explores the political and religious implications of UFOs, using as a model the perspective of our own exploration of space: how would we do it, and how would we handle contacts with less advanced civilizations?

Such an approach is not new to well-informed readers of the abundant ufological literature, but it has a special value here, being treated seriously at such a level. The media/publicity implications are not forgotten, with the problems of disinformation, fear of ridicule, and manipulation by certain groups.

In its conclusion, COMETA claims that the physical reality of UFOs, under control of intelligent beings, is "quasi certain." Only one hypothesis takes into account the available data: the hypothesis of extraterrestrial visitors. This hypothesis is of course unproved, but has far-reaching consequences. The goals of these alleged visitors remain unknown but must be the subject of speculations and prospective scenarios.

Final Recommendations and Annexes

In its final recommendations, the COMETA report stresses again the need to:

1) inform all decision-makers and persons in positions of responsibility;
2) reinforce means of investigation and study at SEPRA;
3) have UFO detection taken into account by agencies engaged in space surveillance;
4) create a strategic cell [for UFO study/analysis] at the highest state level;
5) undertake diplomatic action toward the United States for cooperation on this "capital question";
6) study measures which might be necessary in case of emergencies.

Finally, this document is accompanied by seven interesting annexes:

1) Radar detection in France
2) Observations by astronomers
3) Life in the Universe
4) Colonization of space
5) The Roswell case—The disinformation (a text which will be criticized by some readers and welcomed by others, including myself)
6) Antiquity of the UFO phenomenon and elements for a chronology [of UFO events]
7) Reflection on various psychological, sociological and political aspects of the UFO phenomenon

[*CNI News* notes: Predictably, criticism of this report began immediately in France and on the internet. But to the best of our knowledge, there has never before been such a comprehensive and forthright report on the reality of UFOs publicly released by persons of this stature in any nation or language.]

UFO CASES HIGHLIGHTED IN THE COMETA REPORT

Michael Lindemann with Gildas Bourdais

The authors of the new French UFO report selected a small but impressive sample of UFO cases to illustrate the seriousness of the subject. Many of these cases will be familiar to experienced ufologists, but not necessarily to all readers of *CNI News*. Here is a brief description of most of the cases highlighted in the COMETA report:

•Testimony of French pilot M. Giraud, March 7, 1977: Giraud and his navigator were flying a Mirage IV jet at night near Dijon, France when they saw a bright light rapidly closing. The light tailed them at a distance of 1500 meters though they made evasive turns. They radioed a military radar site, but the UFO did not show on radar.

• Testimony of French fighter pilot Colonel Claude Bosc, March 3, 1976: On a night training flight in a T-33, Bosc saw a bright light approach at high speed on a collision course. His jet was then enveloped in green phosphorescent light for several seconds. Radar showed nothing, but two other pilots saw the encounter from a distance.

• Air France flight 3532, Jan 28, 1994: Pilot and copilot of an Airbus 320-111 flying in daylight near Paris at 39,000 feet reported seeing a very large disc-like craft about 30 miles away and slightly below them. Military radar confirmed presence of an object about 250 meters in diameter. The object was observed visually and on radar for about 50 seconds, then suddenly disappeared.

•Lakenheath RAF, UK, Aug 13, 1956: Extraordinary UFO events occurred over a span of six hours, involving very clear radar tracks of more than a dozen objects sometimes traveling over 4,000 miles per hour, sometimes slower than 100 mph. Jets were scrambled and encountered UFO traffic but could not identify it.

• RB-47 case, USA, July 17, 1957: "Arguably the most important UFO case in history," says veteran researcher Jerome Clark. Flight crew of an RB-47 reconnaissance jet engaged a UFO for nearly two hours over Mississippi, Louisiana and Texas. The UFO was simultaneously tracked visually and by ground and air radar, and a signal from the UFO was tracked as well.

•Teheran, Iran, Sept 18, 1976: Two F-4 jets of the Iranian Air Force separately engaged a brilliant, fast-moving UFO, tracking visually and on radar. On approaching the UFO, the jets' onboard weapons and control functions repeatedly failed, forcing retreat. A second UFO object was seen to separate from the main UFO and appeared to land.

• San Carlos de Bariloche, Argentina, Aug 1, 1995: A commercial jet on approach to Bariloche airport reported a UFO flying alongside. During the plane's descent, the airport experienced a total electrical blackout, forcing the pilot to abort the landing and circle around for a second attempt. Meanwhile the UFO flew upward and disappeared from view.

• Tananarive, Madagascar, Aug 16, 1954: A brilliant green fireball was observed crossing the sky, trailing flames. As it approached, multiple witnesses said it resembled a metallic oval object as big as a DC-4 aircraft. As it passed overhead at low altitude, the city experienced a major electrical blackout.

• Kapustin Yar, Russia, July 28-29, 1989: Military personnel reported a clearly visible disc-shaped UFO hovering low over an army missile base and shining a beam of light down on a weapons depot. The sighting lasted over 90 minutes. A similar report occurred later the same night at another nearby base.

• Valensole, Basses Alps, France, July 1, 1965: Farmer Maurice Masse encountered a landed UFO and two small humanoids in his lavender field at about 6 am. On approach, he became paralyzed but remained conscious while the beings boarded the craft and flew away. Masse suffered massive fatigue for several weeks, and nothing but stunted weeds grew in the landing area for years after. This case was extensively investigated by French authorities.

• Trans-en-Provence, France, January 8, 1981: A disc-shaped metallic UFO was observed by farmer Renato Niccolai to briefly land in his alfalfa field at about 5 pm, then lift off and fly away. Investigation showed that a very heavy object—weighing possibly 4 to 5 tons—had compressed the soil in the landing area, and plants were obviously affected.

• Cussac, France, Aug 29, 1967: Two children reportedly saw a sphere-shaped UFO and "four little devils" on the ground. The humanoid beings were observed to levitate before quickly entering the UFO and flying away. The UFO was said to make a soft whistling sound and smelled of sulphur.

• Nancy, France, Oct 21, 1982: A scientist (who remains anonymous) observed a small disc-shaped object hovering silently just above his garden in the early afternoon. The object remained for about 20 minutes before suddenly flying away at high speed. Amaranth plants in the garden were obviously affected; analysis suggested the presence of a powerful electrical field. ❑❑❑

COLD FUSION TIMES
The Journal of the Scientific Aspects of Loading Isotopic Fuels Into Materials
Published Quarterly
Publisher and Editor, Dr. Mitchell Swartz
Annual Subscription Rate $120/Single Issues $40
Outside U.S. add extra $5.
P.O. Box 81135, Wellesley Hills, MA 02181 USA

New Energy Times Archive

COMPILED BY EUGENE MALLOVE

Trends Journal Picks New Energy Revolution as *the* Top Trend of 21st Century

Gerald Celente, editor and publisher of the influential *Trends Journal* (www.trendsresearch.com) has picked the impending new energy revolution as one of the top trends of the twenty-first century. He writes in the Winter Issue 2000:

"Of all the changes of the new millennium, none will be greater than the unleashing of new sources of energy to drive the engines of commercial power and the machinery of every day life. The effects upon the structures of mankind will be as revolutionary as those resulting from the discovery of fire and the invention of the wheel.

"A new Global Age is being born on the ashes of the dying Industrial Age and the fossil fuels that powered it. Promising developments, so advanced they almost seem to challenge the laws of science, lead us to forecast that, within the next ten years, technological breakthroughs will spell an end to dependence on oil and coal. Energy generating machines, operationally cost-free, will hasten an end to global pollution, global warming, and a foreign policy driven by strategic oil interests.

"The breakthroughs won't result from the unrealized promises of solar or wind energy or the half-measures of fuel cells, but from the visionary research into low energy nuclear reactions (LENRs), zero point energy and hydrocatalytic hydrogen power."

Celente notes perceptively: "Because the principles and imagination of the establishment scientific community is challenged by the vision of an energy revolution beyond past century formulations, it is quick to dismiss the possibility."

These are the nine other top trends that Celente identifies: "The New Millennium Religion, New Millennium Family, Whole Health Planning, WWWMD-1, Renaissance 2000, Virtual Education, Cold War II, The New Politics, and The Home."

THE TRENDS JOURNAL

THE TRENDS RESEARCH INSTITUTE • WORLD LEADER IN TREND FORECASTING

Vol. 10, No. 1 Winter Issue • 2000

THE TOP 10 TRENDS OF THE 21st CENTURY

TREND	PAGE
The Energy Revolution	1
The New Millennium Religion	2
New Millennium Family	2
Whole Health Planning	3
WWWMD-1	4
Renaissance 2000	4
Virtual Education	5
Cold War II	6
The New Politics	6
The Home	6

THE ENERGY REVOLUTION

Of all the changes of the new millennium, none will be greater than the unleashing of new sources of energy to drive the engines of commercial power and the machinery of every day life. The effects upon the structures of mankind will be as revolutionary as those resulting from the discovery of fire and the invention of the wheel.

A new Global Age is being born on the ashes of the dying Industrial Age and the fossil fuels that powered it. Promising developments, so advanced they almost seem to challenge the laws of science, lead us to forecast that, within the next ten years, technological breakthroughs will spell an end to dependence on oil and coal. Energy generating machines, operationally cost-free, will hasten an end to global pollution, global warming, and a foreign policy driven by strategic oil interests.

The breakthroughs won't result from the unrealized promises of solar or wind energy or the half measures of hybrid fuel cells, but from the visionary research into low energy nuclear reactions (LENRs), zero point energy and hydrocatalytic hydrogen power.

FREE AT LAST

Laboratory studies show previously unrecognized energy sources within the hydrogen of water that produce energy releases thousands to millions of times the chemical energy of hydrogen. Work is also being done on new electromagnetic devices that appear to be producing over unity (that is, more energy out than in) perhaps tapping the zero point energy (ZPE) of space and not violating the conservation of energy.

Because the principles and imagination of the establishment scientific community is challenged by the vision of an energy revolution beyond past century formulations, it is quick to dismiss the possibility. Though "free energy" demonstration devices don't yet exist, lab work substantiates the reality of the phenomenon and published peer-reviewed studies support it.

THE VOICE OF THE MILLENNIUM

Global Environmental Energy Technology (GEET) Releases Technology for Small Gasoline Engine Electric Generator Conversion

For those who have just come out of their Y2K-Bug bunkers now that the coast seems to be clear, we have some good news, albeit a little late getting to you. We received the following Press Release from GEET dated October 12, 1999:

Paul & Molley Pantone, founders of Global Environmental Energy Technology and GEET Management, LLC, today announced that they will release their "Small Engine Plans" (< 20 HP) for FREE! This will be a shareware release for "Private Use Only" to convert small gasoline stationary electric generators up to 10 kW! High school students with no technical background have been able to successfully build and run an engine over a weekend from plans.

They are doing this to benefit mankind and help save lives if Y2K electric problems are a reality. They will also accept voluntary contributions if builders would like to donate the original plans cost of $75 to help defer costs of developing larger versions for the market faster. Due to high costs, only licensed users that pay the $75 will receive technical support.

For people unaware of the GEET Fuel Processor, it is a simplified "Plasma Reformer" that takes any hydrocarbon fuel or waste product and transforms it into Hydrogen rich "Synthetic Natural Gas." The "Small Engine Plans" will show how parts can be purchased and then built from plumbing parts from any local hardware store. Benefits include Multi-Fuel availability, and up to 99% lower emissions and double the run time or MPG!

This technology has the ability to be retrofitted to any internal combustion engine, including any gasoline, diesel, or turbine engine. Retrofit plans for larger versions will still be available through GEET Dealers for use on most cars, trucks, etc and specialized parts are now available for purchase for people unable or unwilling to make their own parts.

The small engine plans should be ready within a week and will be available for downloading on the GEET internet websites. Due to the high volume of downloads, Mirror sites are

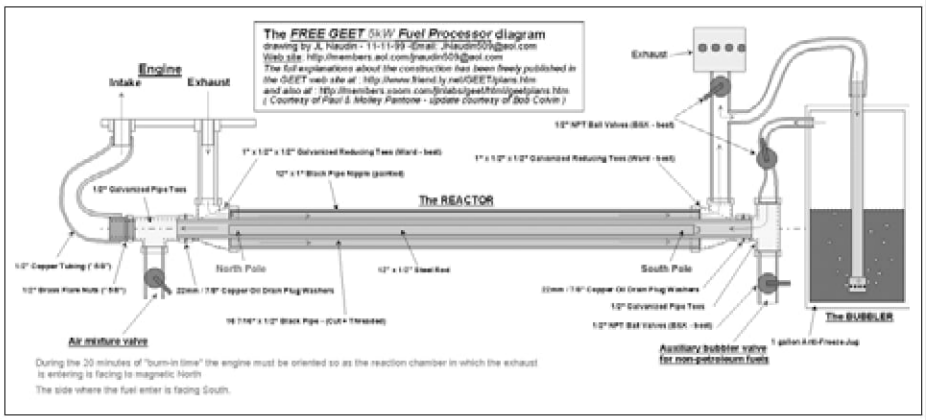

New Energy Times Archive

being requested. Please forward any questions or requests for interviews to Paul Pantone—Inventor 801-281-2462 pms@geet.com. License fees or donations can be sent to Paul Pantone, 625 West 5300 South, PMB, A-136, Murray, UT 84123.

http://www.geet.com
http://www.friend.ly.net/GEET

End of Press Release

We have checked the GEET website (last updated 11/18/99) and the plans are, indeed, there. They are excellent! This should allow experimenters to investigate the efficiency, emission reduction, and component magnetization anomalies that GEET and other experimenters have reported. The plans state: "This is a greatly simplified 'Proof of Concept' version of the GEET Fuel Processor that just about anyone can build from parts from a local hardware store in a weekend for very low cost. A used lawn mower engine will be used for demonstration purposes, so things will be easier to see without obstructions." Those who build and test this unit are invited to report on their findings to *Infinite Energy*. We will consider publishing useful comments and results.

Editor's Note: *Infinite Energy* has previously covered Paul Pantone's work. See *IE* No. 7, p. 15-16; No. 13/14 p. 54; and No. 28 p. 29.

Landmark Article on BlackLight Power, Inc. Declined by *The Wall Street Journal*.

Expanded Version Runs in New York's *Village Voice* Newspaper—Business and Science Highlighted.

Staff journalist Erik Baard of the Dow Jones News Service (affiliated with *The Wall Street Journal*), whose journalistic beat was the energy sector for the U.S. Northeast and Mid-Atlantic regions, had encountered New Jersey-based BlackLight Power, Inc. in the course of his reporting. Fascinated by what he was learning about BlackLight's energy-from-water claims, he placed a short write-up on BlackLight Power and its CEO Dr. Randell Mills in the September 13, 1999 *Wall Street Journal* special section on energy. (See *Infinite Energy* report, Issue No. 28, p. 45.) Baard had also subsequently put out an informative write up on BlackLight for the Dow Jones wire service.

He had planned later to do an even longer article on Mills and BlackLight Power, which he offered to the *Wall Street Journal* as a possible front page feature article. This proposal was unfortunately declined by editors who may have feared that "new science" would be given too high a profile by the prestigious paper. Since Baard was considering writing a book about Dr. Mills' work, this became an opportunity for him to move on. He received permission to try to sell the BlackLight article to another publication. Baard left his three-year job at Dow Jones in early December and is now working as a free-lance writer.

Fortunately, Baard was able to place the article in another publication, New York City's voluminous weekly newspaper, *The Village Voice*, which bills itself "America's Largest Weekly Newspaper"—typically the paper runs about 200 pages in magazine-tabloid format! Many libraries across the nation and distribution centers such as Barnes & Nobles and Border's Books carry the paper, so it has a reach well beyond the New York City area. Baard's article on Mills finally came out in the December 28, 1999 edition (Vol. XLIV, No. 50), as it grew to almost 5,000 words from its original 2,500 words. The article was *the* page one story of the *Village Voice*, with great color cover art of a stylized, high-tech Dr. Mills. The story also appeared in its entirety on the *Village Voice* web site (www.villagevoice.com). The banner: "QUANTUM LEAP—Dr. Randell Mills says he can change the face of physics. The Scientific Establishment thinks he's nuts."

Readers are urged to track down this article, whether or not it is still on the web at the time of this *Infinite Energy* issue's arrival. Baard's account is one of the best, most fair-minded reporting jobs on new energy for the general press in recent memory. It is a shame that *The Wall Street Journal*, formerly one of the best sources for cold fusion and new energy news for the general public, chose to avoid this story. Appearance in the *WSJ* would obviously have given the account much greater exposure, and would have given critical information to those in the high-technology and financial worlds who should know about this. Though the *Village Voice* is to be commended for its heroic coverage, it can't be comfortable to Mills and BlackLight the *Village Voice* is a somewhat "countercultural" paper compared with the *WSJ*.

Infinite Energy has covered Mills' scientific and commercial work in the past, featuring a lengthy interview with him by Art Rosenbloom in Issue No. 17 and a review article by Mike Carrell in Issue No. 24. Mills, though cordial with us, prefers to avoid too close a connection with the "cold fusion" and low-energy nuclear reactions field. He fears perhaps that the knee-jerk bad press against cold fusion would work against his efforts, but he also tries to distinguish his revisionist quantum mechanics from the nuclear reaction explanations of excess energy typically preferred in the cold fusion field. Though Mills certainly had developed his new quantum mechanics prior to the announcement by Fleischmann and Pons in March 1989, it appears that their announcement provided the inspiration for him to work on his hydro-catalytic energy process. If Baard's article is to be faulted, it is for its failure to note this and other connections with cold fusion.

New Energy Times Archive

The article begins with a full-page color photo of Dr. Mills in his 53,000 square-foot laboratory and an artsy facing page bannered "Beyond Rocket Science—The Scientific Establishment Scorns Dr. Randell Mills and His Paradigm-Smashing Research. He Says Forget Quantum Theory. Soon You'll Be Driving a Car 1000 Miles on a Single Charge of Hydrinos." Apart from the business and science reporting, the Baard article features interesting biographical details about Mills and his family. We learn that in January 2000 Mills expects patents to issue on his technologies; also that BlackLight Power, Inc. has accumulated significant investment resources—over $25 million from about 150 investors, including the electric utilities PacifiCorp and Conectiv. Baard relates that RS Funds, Eastbourne Capital Management, and "executives retired from the top echelon" of Morgan Stanley have invested.

We had already learned from Baard's Dow Jones wire report that Morgan Stanley Dean Witter & Co. was considering bringing BlackLight Power public in 2000. This is repeated in the article. Baard notes: "'BlackLight Power is in discussions with Daimler-Chrysler, and three major corporations are already examining materials it has produced,' say Mills and company executives."

Mills' reformulated quantum mechanics theory that allows hydrogen atoms to fall below the normally understood electron ground state has not gone over well with main stream physicists. American Physical Society spokesman Dr. Robert Park has blasted Mills repeatedly and has done so again in the Baard article. Physics Nobel laureate Phillip Anderson of Princeton University was the most blunt of the handful of Mills critics quoted by Baard: "If you could fuck around with the hydrogen atom, you could fuck around with the energy process in the sun. You could fuck around with life itself. . . Everything we know about everything would be a bunch of nonsense. That's why I'm so sure that it's a fraud." Baard told *Infinite Energy* that Anderson was given the opportunity to find a replacement word for the Anglo-Saxon expletive, but he declined to do so, apparently being so self-assured that he wanted the F-word in print.

We learn from Baard the source of the perennial anonymous report that Mills' work had been reproduced at MIT's Lincoln Laboratory. Dr. Charles Haldeman told Baard that he produced excess energy with a few designs of Mills cells when he was a senior staff member at the MIT Lincoln Laboratory in Lexington, Massachusetts—the high-technology, radar, laser, and defense lab that MIT manages for the U.S. Air Force. Quoting Haldeman: "I got pretty good gain compared to the power I was putting in. The effect wasn't as large as Mills was getting, but it was in the direction that was predicted. . . There's clearly incontrovertible evidence that there's something going on in the work of Mills and others that certainly deserves further study. It's a tragedy that the politics of cold fusion has prevented science from taking its course."

It also turns out, according to Baard, that nuclear engineer Michael Jacox, now assistant director of Texas A&M's Commercial Space Center for Engineering, examined a Mills cell "in relative secrecy" when he was a research scientist for the Department of Energy at the Idaho National Engineering and Environmental Laboratory. Positive results were obtained. Baard quotes Jacox: "In the middle of that process there was a management decision that said we should pull the plug on the whole project and not disclose that we had been involved in the project at all."

There is much more in the article—including the revelation that Mills' work seems to be prompting some in the U.S. military to take an interest in military applications of his hydrino compounds. Baard told *Infinite Energy* that he will have another article about Mills in the *Village Voice* in early 2000. That one will focus on the medical inventions and research of the Harvard Medical School-trained Dr. Randell Mills. *Wall Street Journal*, make way for the *Village Voice!* Stay tuned.

GOP Presidential Candidate John McCain Responds to Cold Fusion Query—Agrees to Briefing

At an early morning Town Hall Meeting at the Community Center in Bow, New Hampshire, January 6, 2000, Republican candidate for President Senator John McCain was asked this question by *Infinite Energy's* Eugene Mallove:

Gene Mallove: Senator, you have been a heroic and straight-talking man throughout your career and service to this nation, so I hope your response to my question will be candid. I really do feel that way. I'm Dr. Gene Mallove. I'm the Editor of *Infinite Energy* Magazine that's published

right here in Bow, New Hampshire. Now, our group of hundreds of American scientists, engineers, and concerned citizens have been fighting opposition from the U.S. Department of Energy, the U.S. Patent Office, and official obstruction at the highest levels of the Clinton/Gore Administration on the cold fusion suppression scandal. Do you know what we're talking about? Senator Bob Smith [R-New Hampshire] has been concerned too. He has written for us, not as a special interest but just as a concerned Senator who is not technical himself. I have two questions for you. . .

John McCain: By the way, for the benefit of perhaps the people here, maybe you could describe that a little bit, just so they know what you're talking about?

GM: I will, Senator. First, let me just ask, and this will be cribbing for you, but what do you know about the issue? Okay, perhaps you don't know that much and I wouldn't blame you if you didn't. What do you know about DOE policy and what is your opinion? Second, would you accept a private briefing, unlike Gore and Clinton, on this issue from a group of scientists, including leading cold fusion researcher Dr. Edmund Storms, Los Alamos National Laboratory? I will describe if you want me to. . .

JM: Yes, if for the benefit of the audience you would do that.

GM: How many of you have seen the movie, "The Saint?" Oh, shame on you! [Not many in the 300+ citizen audience raised their hands.] That was about cold fusion; it was in a fictional sense. It's the idea, which was discovered in the United States, by an American citizen, Dr. Stanley Pons, who was formerly the head of the Chemistry Department at the University of Utah. This was an announcement the day before the Exxon-Valdez ran aground off the coast of Alaska, ironically. They said, "We have an electrochemical cell that can produce excess energy."

Briefs continue on page 68

New Energy Times Archive

New Energy Upcoming Events

8th International Conference on Cold Fusion
May 21-26, 2000

The 8th International Conference on Cold Fusion, ICCF-8, will take place in Lerici, Italy, May 21-26, 2000. The study of Cold Fusion phenomena, sometimes referred to as "New Hydrogen Energy," is progressing in numerous laboratories all around the world. More than ten years old, the field is enjoying ever more reproducible experiments and a better interaction with the scientific community. A large variety of experimental approaches will be addressed in the Conference together with theoretical attempts to interpret the observed phenomena.

The Conference will consist of oral and poster presentations. The official language of the Conference is English. Pre-registration, registration and submission of abstracts should preferably be performed using the Conference Webpage:

www.frascati.enea.i

List of Topics:
- Heat and related products
- Nuclear processes and transmutations
- Materials
- Innovative approaches
- Theories

Organized by: The Italian Agency for New Technologies, Energy and the Environment
With the sponsorship of : Consiglio Nazionale delle Ricerche (CNR), Istituto Nazionale di Fisica Nucleare (INFN), and the Società Italiana di Fisica (SIF)

ICCF-8 Secretariat:
M.L. Ciceroni
ENEA C.R. Frascati
Via Enrico Fermi, 45-
00044, Frascati
(Roma) Italy
phone:
(0039)-06-
94005854
e-mail:
iccf8@frascati.enea.it

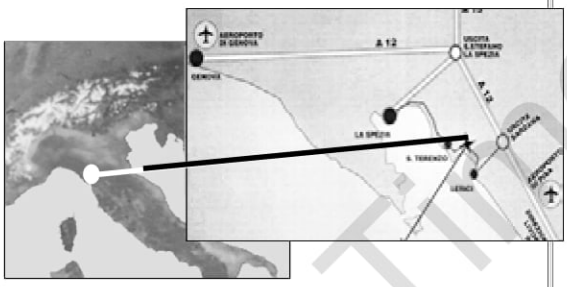

VILLA MARIGOLA, Lerici (La Specia, Italy)

Lerici is a beautiful little seaside town in the "Golfo dei Poeti," on the Tirrenian coast. The closest airports are Pisa (80km) and Genova (100km). *Pisa* is connected daily to: Munich, London and Paris. *Genova* is connected daily to: Frankfurt, Zurich, London, Munich. There are domestic flights connecting Pisa and Genova with Milano Malpensa and Roma Fiumicino. Once in Pisa or Genova, you can reach La Specia by train. The trip takes about one hour. From La Spezia a bus will take you to Lerici in about fifteen minutes. A shuttle service to and from airports at the beginning and at the end of the Conference is being considered. More detailed information about travel and site are available on the Conference webpage.

CALENDAR

Climates of Change Congress
March 19-22, 2000
Victoria, B.C. Canada

EarthFair 2000
April 22, 2000
Washington, D.C. USA

Small Fuel Cells and Battery Technologies
April 26-29, 2000
New Orleans, Louisiana USA

ICCF-8, Eighth International Conference on Cold Fusion
May 21-26, 2000
Lerici (La Spezia, Italy)

35th Intersociety Energy Conversion Engineering Conference
July 24-28, 2000
Las Vegas, Nevada USA

The Natural Philosophy Alliance Meeting
June 5-9, 2000
Storrs, Connecticut USA

Climates of Change Congress
March 19-22, 2000
Victoria Conference Center • Victoria, B.C. Canada
Dr. Eugene Mallove is among the featured speakers.
Contact Bruce Torrie for more information:
1-250-391-9223; skies@islandnet.com

35th Intersociety Energy Conversion Engineering Conference
July 24-28, 2000
Riviera Hotel Las Vegas, Nevada
Energy and Power in Transition
•Aerospace Power Systems and Technologies •Conversion Technologies • Electrochemical Technologies • Environmental Impact • Energy Systems • Policy Impact on Energy • Renewable Energy Sources •Thermal Management
For additional conference information, contact the American Institute of Aeronautics and Astronautics Customer Service Center at 1-800-639-2422 or custserv@aiaa.org

EarthFair 2000
in celebration of
Earth Day on the Mall
in Washington, D.C.
April 22, 2000
Features: solar-powered stage will feature international entertainment and top musical acts from the U.S.; hundreds of exhibits displaying all the elements of a sustainable society; sun, wind, earth, water, and people will be powering exhibits, modeling central components of a clean energy future; hands-on activities; children's activities; opportunities for direct action.

Earth Day Network 2000
91 Marion Street
Seattle, WA 98104
Fax: 206-682-1184
Email: earthday@earthday.net
Website: www.earthday.net

Palladium/Deuteron Session
At the American Physical Society March meeting in Minneapolis, scheduled for March 20-24, 2000 there will be a session entitled, "Palladium/Deuteron." The session (#C32) will be held on March 20, beginning at 2:30 p.m. in Room 213A of the Minneapolis Convention Center, Minneapolis, MN.
Abstracts for the session may be viewed on-line, using the following address: http://www.aps.org/meet/MAR00/baps/tocC.html#SC32.001
Information about the meeting is available on-line, at http://www.aps.org/meet/MAR00/

Advances in R&D for the Commercialization of Small Fuel Cells and Battery Technologies For Use in Portable Applications
April 26-29, 2000
Hyatt Regency New Orleans • New Orleans, LA
Register Online at www.knowledgefoundation.com
Tel: (617) 232-7400 • Fax: (617) 232-9171
E-Mail: custserv@knowledgefoundation.com

The New Natural Philosophy: An Introduction to 21st Century Physics and Cosmology
• June 5-9, 2000 •
University of Connecticut, Storrs, CT
Natural Philosophy Alliance
P.O. Box 14014, San Luis Obispo, CA 93406
http://members.home.net/saiph/npahome.html

New Energy Times Archive

Book Reviews

A Theory of Physical Vacuum: A New Paradigm
by G. I. Shipov
Originally published in Russian by Moscow ST, Russia, 1993
Translated into English by A.P. Repiev, 1998
$100.00 Hardcover, 312 pp.
Available from Elena Tourantaeva
e-mail elena_t@df.ru

Review by Dr. Thomas E. Phipps, Jr.

Let me begin with a little parable: If you are a theoretical physicist and I say to you, "I was up all last night and discovered two equations in three unknowns, which I feel may possibly prove relevant to the description of some aspect of physics," you are very apt to respond, "Bug off, you insufferable Blatherskite, and don't waste my time until you can at least come up with a third equation." But if, instead, I say to you, "I have labored for thirty-five years in the track of the great Einstein and have lately come down from the mountain with forty-four equations in fifty unknowns, which I am certain describe every aspect of this universe or any other," you are very apt to respond, "By George, may I kiss the hem of your robe?"

Enough of that. Up front, I wish to say I am fully aware it is not fair that I should review this work of Shipov's—any more than it would be fair that a flat-Earther should review a work of Copernicus'. But I have been asked to do it, so (in default of willpower) must set aside my gross lack of qualifications and inclination and buckle down to the job.

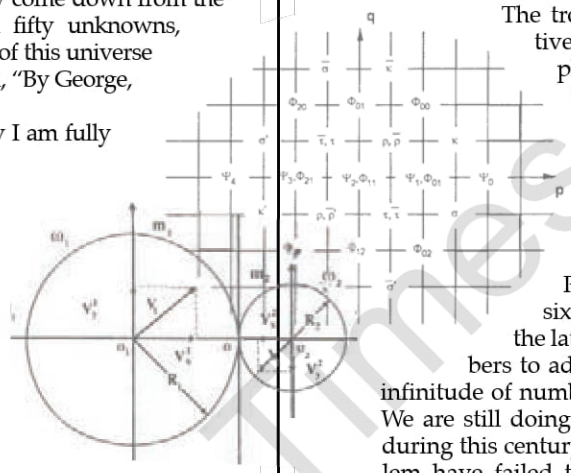

Einstein's basic idea was that matter can be geometrized. . . that is, the nonlinear mathematics of curved-space geometry can describe (or maybe *be*) the localized "particles" experimentalists observe in nature. But Einstein found himself forced to use a matter tensor that lay outside geometry. This deficiency has now been corrected by Shipov, who has geometrized the matter tensor, thereby fulfilling the hopes of countless followers of Einstein. Yes, Hallelujah, here's the longed-for *unified field theory* complete with electromagnetism, gravity, strong forces, weak forces, all that good stuff, and whatever else may turn up. (What's the saying—be careful what you wish for, you might get it?) He has expressed this accomplishment in several mathematical languages, that of vectors, tensors, spinors. . .and don't encourage him, Marge, or he'll do it in quaternions. He employs the "geometry of absolute parallelism" (to which half the book is devoted, and which your benighted reviewer thought began with Euclid, but which turns out to have been "first considered in 1923-24 in the works of Weitzenbock and of Vitali"). All this and physics, too: to wit, a "universal relativity principle." To all dedicated field theorists I strongly recommend this book and a hair shirt. Eat your hearts out with envy.

Many other hopes have been realized here—the hope for a purely field theoretical description of nature, the hope for a description of torsion-of-space (with creation of matter out of the twisted vacuum), the hope (Einstein's) to restore determinism to the quantum world via geodesics, the hope of elucidating inertia, the hope of describing elementary particles, neutrinos, etc. . .and several other hopes that presently slip my mind. It's a very creative effort. So why am I diminishing it with ironical praise? Simply because, to my mind, it's too creative. When you come up with forty-four equations in fifty unknowns and seek "exact solutions," creativity is forced upon you. You are dealing with an underdetermined system—and to determine it you have to put more than a little of yourself into it. That's what has happened here. In principle, the unified field theory is supposed to do everything all on its own, to squeeze everything out of itself, to do the whole job of physical description through exact solutions of itself. But of course, if it consists of forty-four equations in fifty unknowns, that's not possible. The theory then has to get a little help from its friends.

So, you will find a bit of Shipov in these solutions. . .and Shipov, it turns out, has been looking at the world. That's how neutrinos and all get into it. Now, looking at the world is something lowly types like empiricists and experimentalists are allowed and even encouraged to do; but the first-class citizens of physics, the theorists, are proud synthesists of the world, not students of it. Any looks they snatch at the world are guilty ones, for they are supposed to be looking exclusively at their mathematics. . .the magic mirror that, if properly framed and hung, is expected to tell them all they need to know.

Shipov is well aware of the element of creativity that creeps into the "solution" of an underdetermined set of equations. He has verbalized this by speaking of "constructing solutions" rather than "solving" his unified field equations. The trouble is, from the long-term perspective of the whole past and future history of physics, there's not much glory in constructed solutions that partly give us back whatever we choose to put in. In the same way, there wasn't much glory in Ptolemaic physics—a mere thousand years' worth. The difference between Einstein-Shipov's unified field theoretical physics and Ptolemaic physics is that the former has six arbitrary functions to adjust, whereas the latter had an infinitude of arbitrary numbers to adjust. Because a function represents an infinitude of numbers, that difference comes to nothing: We are still doing Ptolemaic physics. Since all attempts during this century to apply field theory to the Big Problem have failed to yield fully determinate systems of equations, there must surely come a time in the not too distant future when a whistle must be blown on this whole category of human effort. Am I wrong? Is not the clock running out? Or must we wait another thousand years?

Having destructively criticized, let me proceed to praise the book. Mathematically, it is a *tour de force.* It encapsulates the life work of a gifted and productive scholar who has literally out-Einsteined Einstein. Unfortunately, the book makes no concessions to the reader's fallibility or ignorance. It is not a tutorial in either math or physics. You may think you know what 0, 1 stand for but what about $\dot{0}$, $\dot{1}$? These appear without explanation in connection with spinor analysis. If you feel competent to cope with such surprises, and the names of Cartan and Schouten cause no constriction in your esophagus, then this is your kind of book. Otherwise, don't say I didn't warn you.

Finally, is there any relevance to cold fusion or new energy? Well, with torsion of space and such in mind, the author does speak of "a possibility in principle to create an engine of a new type that relies on the inertia fields and forces," and of "creation of devices that use the new types of fundamental interactions." He also speaks of "a possibility to create radiators and receivers of monopole electromagnetic radiation." The latter stems from an interesting "solution" in terms of time-dependent charge. (There are also "solutions" in terms of time-dependent rest mass—created out of the vacuum. Nature seems to have neglected her opportunities in such matters.) None of these possibilities, however, is reduced to specifics. But it is refreshing to find a theorist whose work even in the slightest degree suggests that all is not yet known on the practical side of physics—a suggestion that might encourage other theorists to break the pattern by setting aside their beloved mathematics and taking a good, long, guilt-free look at the actual world.

❐❐❐

New Energy Times Archive

The Innovator's Dilemma: When New Technologies Cause Great Firms to Fail

by Clayton Christensen

ISBN 0-87584-585-1

$27.50 Hardcover, 225 pp.

Harvard Business School Press, 1997

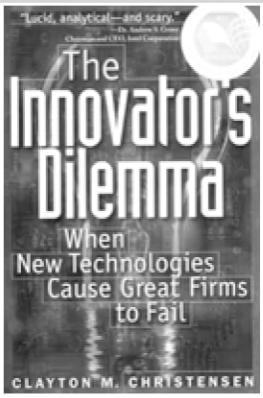

Review by Jed Rothwell

I find many books about business boring, poorly written, and unoriginal. Most have little applicability to revolutionary discoveries like cold fusion. This is an exception. It won a number of prizes and lavish praise from people like Andrew Grove, chairman of Intel, who wrote: "This book addresses a tough problem that most successful companies will face eventually. It's lucid, analytical—and scary." The author's main theme is that established corporations are not good at developing what he calls "disruptive technologies," that is, machines or techniques which are inadequate in some ways, yet which have great future potential. A disruptive technology starts out being too small, too slow, or too expensive for the mainstream user. It appeals to people with special needs in niche markets. It then improves more rapidly than the conventional technology, invading the mainstream market "from below." Finally it displaces the mainstream product.

Established companies have difficulty dealing with disruptive technology. This problem is at the heart of the cold fusion dilemma. It is one of the reasons cold fusion has not been aggressively developed by major corporations, and why it will probably not be sold by today's leading energy providers.

Christensen makes a distinction between "disruptive" and "sustaining" innovations. A sustaining innovation makes products more appealing to existing customers. It improves the state-of-the-art in ways that everyone can appreciate. Things are made faster, cheaper, more capable. A sustaining technology is usually more sophisticated than the older version. It takes more expertise to manufacture, and more expensive production lines. The end product may be quite different from previous models. It may be based on different physical principles, but it is functionally equivalent and it fills the same customer needs. Christensen describes the "radical" yet sustaining change from steam to gasoline powered cable-driven excavation equipment: "Where steam shovels used steam pressure to power a set of steam engines to extend and attract the cables that actuated their buckets, gasoline shovels used a single engine and a very different system of gearing, clutches, drums and brakes . . ." Yet the established manufacturers of excavation equipment made the transition, and customers were quick to buy the new machines. Managers in established companies are trained to recognize and aggressively invest in sustaining technology, to keep up with the competition.

Disruptive technology may be cheaper per unit, but it is less cost-effective, slower, less reliable, or less efficient. Established customers have no use for it. Disruptive technology is usually simpler. It may be based on a new breakthrough or on repackaged older technology. To sell disruptive technology you must find new customers. The best place to look for them is in an emerging market. In 1981, Seagate introduced the 5.25-inch Winchester hard disk drive. Christensen compares it to the 8-inch drives that were the industry standard at that time:[1]

The smaller drives were less efficient, slower, and they cost more per megabyte. In 1981 the existing customers for hard disks were minicomputer manufacturers. They wanted more megabytes per dollar, more speed. They did not care how much disk drives weighed or how much space the drives took up.[2] People in the emerging desktop computer market, on the other hand, wanted a low unit-cost, compact, lightweight drive. They were willing to sacrifice speed and cost per megabyte for these advantages. If Seagate had pursued customers in the minicomputer market, it would have swiftly gone out of business. The 5.25-inch drives improved more rapidly than the 8-inch drives, because they were based on simpler technology. By 1987 the capacity of the 5.25-inch drives met demand in the minicomputer market, although 8-inch drives were still faster and had higher capacity. Eight inch drives had gone beyond the needs of the market, and they had not improved or fallen in price as rapidly as the small drives, so they became obsolete. Companies which had served their customer needs faithfully and

	8 inch drives (minicomputer market)	5.25 inch drives (desktop computer market)
Capacity (MB)	60	10
Physical volume (cu. in.)	566	150
Weight (lbs.)	21	6
Access time (milliseconds)	30	160
Cost per megabyte	$50	$200
Unit cost	$3000	$2000

stuck with the old eight-inch technology went out of business. They were "held captive by their customers," as Christensen puts it. Companies which entered the 5.25-inch market two years after Seagate also failed, because they could not compete with Seagate's wealth of experience and its base of satisfied customers.

Where established customers see a problem, new customers may see a feature. Hydraulic excavating machines (called "backhoes") were introduced in the late 1940s. They were small and weak at first. They moved only 1/4 cubic yards of dirt with a narrow scoop. Cable excavators moved 1 to 4 cubic yards with each scoop, at a much lower cost per cubic yard. A workman would use a cable excavator to dig the foundations of a house, then others would dig a narrow trench with a pick and shovel from the house to the street, for the water and sewage lines. The cable excavator was too big to dig this narrow trench, but the hydraulic backhoe was ideal. Its small size was an advantage for this job. Hydraulic equipment improved, and by 1970 it could be used for all jobs, large or small. The cable excavator companies went out of business. Christensen describes the situation from their point of view, starting in the 1950s:

> Hydraulics was a technology that their customers didn't need—indeed, couldn't use. Each cable shovel manufacturer was one of at least twenty manufacturers doing everything they could to steal each other's customers: If they took their eyes off their customers' next-generation needs, existing business would have been put at risk. Moreover developing bigger better, and faster cable excavators to steal share from existing competitors constituted a much more obvious opportunity for profitable growth than did a venture into hydraulic backhoes, given how small the backhoe market was when it appeared in the 1950s. . . [T]hese companies did not fail because the technology wasn't available. They did not fail because they lacked information about hydraulics or how to use it; indeed, the best of them used it as soon as it could help their customers. They did not fail because management was sleepy or arrogant. They failed because hydraulics didn't make sense—until it was too late.[3]

Most electric cars accelerate slowly, reach a top speed at 130 kmph (80 mph), and can travel only 160 km between charges. Are these problems, or features? Christensen says that if he were trying to sell electric automobiles, he would look for customers who *like* these qualities, for example, the parents of teenage drivers. He says if he

Established companies have difficulty dealing with disruptive technology. This problem is at the heart of the cold fusion dilemma. It is one of the reasons cold fusion has not been aggressively developed by major corporations, and why it will probably not be sold by today's leading energy providers.

New Energy Times Archive

A working cold fusion generator at any price, for any market, would be the kiss of death to the electric power industry, just as the first chattering, automobiles in 1895 spelled the inevitable, protracted demise of horse-drawn transport thirty-four years later, and the first microcomputers meant the end of most mainframe computers ten years later.

were managing an electric car project: "Odd as it sounds . . . I would direct my marketers to focus on uncovering somewhere a group of buyers who have an undiscovered need for a vehicle that accelerates relatively slowly and can't be driven farther than 100 miles!"[4] Nowadays, thanks to the Internet, you can uncover this group of people in 0.8520 seconds by looking up "electric vehicle enthusiast" with the Fast Search utility.[5] The Internet is the ideal medium for selling niche products like Toyota's hybrid electric Prius:

> One thing Toyota won't be doing, [Prius project manager] Amstock said, is "shot-gunning" the market place with a lot of television advertising about the car. "Those are pretty inefficient dollars." Instead, the company is going to rely on more focused means of reaches the market they think the car will appeal to, consumers who are environmentally conscious and technologically adept. Because of the company's success with its family demo program on the Internet, it is going to it as one of its primary means of reaching consumers.[6]

Electric cars fit the criteria for disruptive technology: they are less capable than gasoline powered models, they appeal to a niche market, they are mechanically simpler in some ways, and they are improving more rapidly than gasoline models. Hybrid electric cars, on the other hand, look like sustaining technology. Their speed is as good as conventional cars, and their range is two to three times better: about 1,100 km on one tank of gasoline.[7] They are not new. The first one was patented in 1905, and hybrid diesel electric railroad locomotives have been the dominant type in North America since the late 1940s. They should appeal to a broad range of customers because they are two to three times more energy-efficient and far less polluting than conventional models.[8] They are more sophisticated technology, not a simplification. They cost somewhat more to manufacture. A sedan slightly larger than a Corolla compact will sell for just under $20,000. (This additional cost will soon be recovered by the savings in fuel, even at today's historically low gasoline prices.) According to Christensen's model, automobile manufacturers should be aggressively developing hybrid electric cars, yet they have ignored them. Toyota and Honda have introduced hybrids in Japan which are scheduled to be sold in the U.S. in 2000, but U.S. automakers have not moved to enter this market.

Christensen describes lively examples of disruptive technology in various industries: mainly computer hard disks, but also steel minimills, hydraulic excavators, motorcycles, and insulin. He finds that most innovations, including disruptive ones, are developed by established corporations. The big companies come up with great ideas and then put them aside. Hewlett-Packard let Steve Wozniak walk out the door with his design for the Apple Computer. The Xerox Parc research institute invented modern graphic operating systems like Windows, but Apple and Microsoft sold them. Startup companies usually borrow ideas from established companies, and they usually begin with less than state-of-the-art technology. The early microcomputers were technically far behind minicomputers. They were inconvenient, slow, and the software even today is nowhere near as reliable as minicomputer software was in 1979.

Cold fusion has also been largely developed by maverick scientists working within mainstream institutions. Toyota and the Electric Power Research Institute (EPRI, working with SRI) have done some of the most impressive cold fusion research, but they put the results aside and canceled or scaled back programs, apparently because managers within these organizations are hostile toward cold fusion.[9] If Christensen's hypothesis is correct, these managers are also puzzled by cold fusion, and cannot imagine what they would do with it. EPRI is a consortium of major U.S. power companies. The first cold fusion generators will probably produce a few thousand watts and they may cost $10,000. Initially, they will be far less cost-effective than conventional generator plants, and they will be built on a scale a million times smaller. If you ignore the future and pretend that cold fusion will never grow larger or more capable, EPRI's management decisions seem correct. A cold fusion generator will be nothing like a gas or wind turbine, which works best when connected to a power grid. Even I cannot see why an electric power company would want one, or what it would do with one. There is no role for a power company in a cold fusion world. A working cold fusion generator at any price, for any market, would be the kiss of death to the electric power industry, just as the first chattering, automobiles in 1895 spelled the inevitable, protracted demise of horse-drawn transport thirty-four years later, and the first microcomputers meant the end of most mainframe computers ten years later. Cold fusion cannot help the energy industry. It can only strangle it. The rational response to cold fusion would be to prepare for the orderly liquidation of the electric power industry, the oil companies, and the rest of the energy sector. This would be unthinkable to managers at ExxonMobile. From their point of view, it is like suggesting that if Liechtenstein declares war on the U.S., the Pentagon should immediately begin negotiating a surrender.

Christensen says the managers at large corporations are the smartest and most hard-working people he knows. I have less respect for them, because I was there in 1981 and I knew that small disks would soon outpace the 8-inch ones, and microcomputers would soon replace most minis and mainframes. The trajectory of improvement was obvious to every junior computer operator and technician who followed the trade magazines. The managers at the 8-inch disk companies must have read those magazines. Why didn't they act? Christensen says they relied upon "the best managerial techniques." These techniques work well with sustaining technology, and the "vast majority of innovation" falls in this category. When managers are faced with disruptive changes, their training betrays them.

The book includes a fascinating discussion of how and at what stage to enter an emerging market. Christensen reconciles the opposite views of conventional wisdom: 1) You should jump in quickly; 2) It is better to wait until the pioneers clear the way and resolve the major risks. Christensen found that with sustaining technology, you can afford to wait a few years. Companies that come in late often catch up. But, with disruptive technology, even a short delay can lead to a huge disadvantage. "The companies that entered the new value networks enabled by disruptive generations of disk drives within the first two years after those drives appeared were six times more likely to succeed than those that entered later." The size of the company does not matter much. Small start-up firms and the divisions of larger companies succeed about equally well. It is common knowledge that an early entry to a new market can be beneficial, but Christensen's research shows the astounding magnitude of the advantage: "The firms that led in launching disruptive products logged a cumulative total of $62 billion dollars in revenues between 1976 and 1994. Those that followed into the market later, after those markets had become established, logged only $3.3 billion in total revenue. . . Firms that sought growth by entering small, emerging markets logged 20 times the revenues of the firms pursuing growth in larger markets."[10] Anyone thinking of investing in new technology should read this.

Christensen describes several other problems that prevent large companies from successfully selling disruptive technology.

He describes a rule of thumb: "What goes up, can't go down."

Innovator's continues on page 69

New Energy Times Archive

An Introduction to Stirling Engines
by Professor James R. Senft
ISBN 0-9652455-0-0
$12.95 Paperback, 80 pp.
Moriya Press, 1993

This is a marvelous and intriguing little book that relates the little-known history of Stirling heat engines, which dates back to 1816. Stirling engines employ air (typically) as a working fluid and have recently been made to run from amazingly small heat sources—such as the heat of one's hand—and across tiny thermal differences as small as 0.5°C. Thus, modern Stirling engines, such as some that can be obtained from American Stirling Company (1313 N. Maize Road Ct., Suite 1602, Wichita, Kansas 67212), might well become useful heat engines for the conversion of cold fusion/LENR heat to mechanical motion and/or electricity. The book is an excellent tutorial on the various design aspects of these wondrous, simple engines. We at New Energy Research Laboratory (NERL) recently ordered a few of these engine demonstrator devices from American Stirling Company and were quite pleased with the quality of the products. One unit, assembled from a kit, is powered by the heat from a cup of coffee. To see unit MM-6 running silently from the heat of your hand in ambient air is a joy to behold. Stay tuned for more reports from NERL's Ken Rauen on these and similar heat engines.—*Gene Mallove*

The Refrigerator and the Universe: Understanding the Laws of Energy
by Martin and Inge F. Goldstein
ISBN 0-674-75325-9
$15.95 Paperback, 433 pp.
Harvard University Press, 1993

Review by Ken Rauen

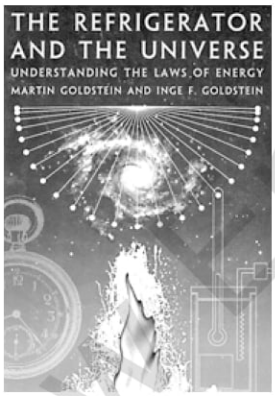

The title of this book struck me very differently than what the authors intended. A popular book from the 1960s entitled, *Zen and the Art of Motorcycle Maintenance*, came to mind. Hmmm. . . a topic which brings spirituality into the nuts-and-bolts of everyday life, and into a specifically material realm at that. Not quite. What the Goldsteins meant by the title was that the central topic of their book—energy, and entropy in particular—applies to all aspects of energy, from the specifics of how a refrigerator works to how the universe is structured by energy. The Goldsteins met their objective very well. I was favorably impressed with the presentation of every topic in the book. They really do explain the little details and give "the bigger picture,"and do it better than most science books I have read. Many scientifically oriented books are not exciting and will put you to sleep. This one remains scientific and is also fascinating. Despite my formal education, which makes much of the book a review for me, it kept my attention. The subject matter is well presented. Actually, the book goes into so much of the history behind scientific developments that I learned a lot about how today's understanding got to be where it is. For example, the long debate between the caloric theory and the kinetic theory of heat is presented in delightful detail.

Entropy is the biggest topic presented. A graphic analogy to entropy is given as the process of burning wood, as captured on motion picture film or video tape: the process proceeds in the forward direction, but never in the reverse direction as depicted by playing the recording in reverse. Another example given is the solution of sugar in coffee: sugar crystals are added to coffee and dissolve, yet the dissolved sugar never recrystalizes in the coffee. The backward directions of these processes are observed to be impossible. This identifies an attitude which the world in general and the scientific community in particular have that is not recognized. What has been observed not to occur is assumed to be impossible. The authors wisely observe that the Second Law of Thermodynamics, which describes the behavior of energy in terms of entropy or randomness, does not state that it is impossible for entropy to decrease, for smoke to come together into a flame and to produce a piece of wood in the most outrageous example; the Law says it is extremely unlikely.[1] Despite this, the authors state that all real processes must have entropy increases.[2] By their way of thinking, the universe can run down like a clock and stop.[3,4] Charles Steinmetz rebutted this argument soundly.[5] I present rebutting evidence also. The earth itself contains widespread examples of entropy decreases in the mineral strata of the earth's crust. How could increasing randomness be absolute when molten earth has solidified into pure and crystalline minerals nearly everywhere that bedrock is exposed? How could galaxies be accelerating apart if the universe is winding down from entropy generation? The whole story has yet to be told. Even so, this book correctly acknowledges the observed limitations of the transformation of heat into other forms of energy; this is the true significance of the Second Law.[6] It is also pointed out that the laws we have written to describe natural phenomena are limited by the compartmentalization that has occurred in science.[7]

Problems with logic crop up frequently in the text. It is not just the authors who are at fault, it is the scientific community in general which accepts and propagates the bad logic. I have even caught myself uncritically accepting and propagating what I was taught. The book has numerous examples of these shortcomings. Chapter 7, "The Molecular View of Entropy," starts with an expectation of the intuitive understanding of entropy.[8] This is dangerous and not the best technique for scientific understanding.

The general statement of the Second Law that entropy tends to increase is taken to be universally true.[9] It has not been proven to be universally true, and the logic used to arrive at this conclusion is through a preceding negative conclusion in Carnot's theorem. Negative conclusions cannot be proven. See my accompanying article (in this issue, p. 47). Carnot's theorem is the most detailed theory within the Second Law, and is used as the primary, if not the only, proof of the universality of the Second Law.

Chapter 14,"Quantum Mechanics and the Third Law," explains why heat capacities are not linear at low temperatures.[11] The book follows conventional science and, in disregard of the heat capacity issue, sticks to the linear interpretation of the Second Law. Entropy is defined in thermodynamics as heat divided by absolute temperature. Heat capacity is measured as the change of heat divided by the change of temperature. Is something being ignored here?

Chapter 5, "Engines and Refrigerators: The Second Law," speaks of one interpretation of the Second Law, that a heat engine which takes heat from a heat reservoir and does an equivalent amount of work is impossible. The text correctly calls it a hypothesis. It is used in circular logic to prove itself.[12] Such an engine just described is called a perpetual motion machine of the second kind (PMM2). There is no irrefutable evidence that a PMM2 is impossible. I won't call it proof, because "proof" is a state of mind. At what point do you call evidence enough to become proof? Irrefutable evidence

Refrigerator continues on page 68

New Energy Times Archive

Carnot is Not Universally True: An Argument That Higher Engine Efficiency is Possible

Ken Rauen*

Classical thermodynamics has built its foundation upon Carnot's theorem, a mathematical equation defining the theoretical maximum efficiency of heat engines. Modern science and engineering accept Carnot as a benchmark of performance and an absolute limitation for all heat engine designs. It is treated as a fundamental guiding principle, comparing with the law of conservation of energy, Heisenberg's uncertainty principle, and Ohm's law. Some heat engines can achieve efficiencies higher than what is stipulated by Carnot.

Carnot's theorem is only valid under certain conditions. A scientific theory is a principle derived from experimental evidence or derived as a conclusion from a set of premises assumed to be true. Carnot's theorem was derived as a logical conclusion to a theoretical set of conditions. A conclusion is only true if its premises are true and only applies within the bounds of its premises. If a premise has a limitation, then the conclusion is also limited. It has been assumed by all, as history attests, that Carnot applies universally to heat engines. This is an invalid conclusion.

The premises and assumptions behind Carnot's theorem are usually forgotten and often never mentioned in the study of thermodynamics, even in today's accredited universities. Because of this sad fact and the exceptional claim of this paper, an in-depth tutorial of Carnot's theorem is in order.

A French engineer in 1824, by the name of Sadi Carnot, developed an argument which has been adopted as the definitive description of heat engine performance. His argument is a theoretical one, based upon a cycle which, to this day, has not been built. It is a theoretical cycle, not a practical cycle. The actual engine closest to Carnot's mythical engine was developed by a man named Rudolf Diesel, who made his famous engine while attempting to make a Carnot engine.

Carnot used a conceptual model of a heat engine cycle with ideal gases and the "ideal" conditions of precise processes and reversibility to make the point that any engine is limited to producing a maximum amount of work from the heat passing through the engine. Reversibility is the thermodynamic condition of equilibrium, where energy flows are so stable that they could be reversed without disturbing the process. Reversibility cannot be achieved in real engines, as all known, useful, thermodynamic processes are just that—dynamic and not static. Static conditions are the only known, practical way to approach true reversibility, which is a non-solution for a practical heat engine. This contributed to the development of the Second Law of Thermodynamics, which is the overarching description of energy's tendency to randomize itself.

The conceptual model which Carnot chose is composed of the following processes:

1) isothermal (no change in temperature) expansion,
2) isentropic (no change in entropy) expansion,
3) isothermal compression, and
4) isentropic compression.

Isentropic processes are often referred to as adiabatic processes, meaning there is no flow of heat to or from the process. All work generated or consumed by adiabatic and isentropic processes come from and go to the internal energy of the working fluid. If no chemical, potential, or kinetic energies are involved, the internal energy is only thermal energy. That is why adiabatic processes are isentropic under reversible conditions; heat is proportional to temperature, and entropy is heat divided by temperature. Isothermal expansion and compression occur with the working fluid, an ideal gas in Carnot's example, held at constant temperature. An ideal gas in a reversible isothermal process does not change its internal energy, so all work generated or consumed must come from the heat input or output. (Nonideal gases and vapors do change their internal energy, but the change is small compared to the work energy.) Work equals heat flow; isothermal expansion and compression are unity conversion processes for ideal gases under reversible conditions. Isothermal expansion generates work. Expansion work is a form of energy which leaves the expanding fluid, so heat must be supplied to this process to keep the temperature of the working fluid the same. Heat is added to the engine at high temperature. Expansion continues as adiabatic expansion, without any opportunity for heat to flow in or out. This additional work generated removes internal energy from the working fluid, so the temperature of the fluid drops. Internal energy, as only thermal energy, is defined as heat capacity at constant volume, C_v. The adiabatic work contribution is

$$W = mC_v (T_{high} - T_{low}),$$

where m is the mass of the working fluid, C_v is its heat capacity per unit mass, and T_{high} and T_{low} are its initial and final absolute temperatures in the adiabatic process. After adiabatic expansion, heat is allowed to flow for isothermal compression at a lower temperature. This time, heat must leave the working fluid in order to keep a constant temperature as the fluid is consuming the work of compression. Heat is rejected from the engine at low temperature. Compression continues as adiabatic compression. This additional work consumed adds thermal energy to the fluid, thereby raising its temperature. When the cycle is complete, the working fluid is back to the same temperature, pressure, and volume, ready to start the cycle again.

The net work generated is equal to the heat input minus the heat output,

$$W_{net} = Q_{in} - Q_{out},$$

because the isothermal heat flows are equal to the work in those steps, and the adiabatic internal energy heat and work flows are equal and opposite, due to the same temperature difference, and therefore cancel each other. The conceptual simplicity of this cycle is why Sadi Carnot chose it for his argument.

Efficiency is defined, for a heat engine, as net work generated divided by heat input:

$$\text{Efficiency} = W_{net} / Q_{in}.$$

Since net work was shown to equal the heat flow difference,

$$\text{Efficiency} = (Q_{in} - Q_{out}) / Q_{in}.$$

Since Q_{in} and Q_{out} are equal to the respective isothermal work energies, they may be replaced by the isothermal work energies. Isothermal work for an ideal gas is defined as

$$W = (P_{start}) (V_{start}) \ln (V_{start} / V_{finish}).$$

(ln = natural logarithm)

Copyright © 1999

New Energy Times Archive

An ideal gas conforms to the Ideal Gas Law, which states,

$$PV = nRT,$$

where P is pressure, V is volume, n is the number of moles of gas, R is a constant which converts engineering units so that both sides of the equation are equal, and T is the absolute temperature. It is beyond the scope of this paper to present the full mathematical detail of Carnot's argument. For most readers, the full detail need not be presented and what is shown in this paper is enough to see the general derivation of Carnot's theorem. For those who do want to see the well-established mathematical derivation in detail, see reference one. Through some lengthy algebra and calculus, the isothermal work energies are shown to be proportional to their absolute temperatures. It is not obvious that the isothermal work energies are proportional to their absolute temperatures because the natural logarithm of the volume ratio complicates the work equation. The work energies are proportional, as shown in the cited text. Since efficiency is a dimensionless ratio, substituting the temperatures, instead of the work energies, into the last efficiency equation is legitimate and gives

$$\text{Efficiency} = (T_{in} - T_{out}) \ / \ T_{in},$$

which is what Carnot's theorem "boils down to."

Let's look at the assumptions, premises, and intermediate conclusions behind the theorem, which led to the final conclusion that it is the most efficient cycle possible.

The thermal energy of a working fluid is proportional to its absolute temperature. This is one of the premises of Carnot. By the Kinetic Theory of Gases (KTG), which is the fundamental model of the nature of heat, gas particles (atoms or molecules) are in motion and have kinetic energy. This energy is thermal energy. A gas at thermal equilibrium will contain particles with a range of kinetic energies described as a Maxwell-Boltzmann statistical distribution. The average kinetic energy of the gas is directly proportional to its absolute temperature. Thermal energy, therefore, is proportional to absolute temperature. Along with two other premises, an intermediate conclusion is drawn. To state it totally, since an engine passes heat with a temperature difference, and heat is proportional to absolute temperature, and the First Law of Thermodynamics is valid, the work generated under reversible conditions must be proportional to the temperatures of the engine.

Other premises and intermediate conclusions of the theorem are as follows. Reversible isothermal work of an ideal gas is proportional to absolute temperature and equal to the heat flow of the process. A more efficient process than isothermal conversion of heat into work would violate the First Law of Thermodynamics—the law of conservation of energy—so isothermal conversion is the most efficient engine process possible. Since pressure-volume expansion work cannot continue indefinitely, a cycle must be created to bring the working fluid back to its starting point. Since the Carnot cycle converts all isothermal heat flows with unity conversion and with no other heat flows occurring in the cycle, no combination of processes exist which can convert heat into work more efficiently as a total cycle than the Carnot cycle. Therefore, it is boldly declared that this is the most efficient cycle possible for any heat engine to convert heat into work.

This is not a valid conclusion. It is invalid on three counts:

1) no combination of processes exist which can convert heat into work more efficiently as a total cycle than the Carnot cycle,

2) the work of an engine must be proportional to absolute temperature differences because of the KTG, and

3) the applicability of the KTG.

A negative hypothesis cannot be proven. The hypothesis that no combination of processes exist which can convert heat into work more efficiently as a total cycle than the Carnot cycle is insupportable. All it takes to disqualify a negative claim is for one more condition to be added, which can change the outcome. An example illustrates the point. If a statement is made from experience that water cannot remain a liquid if its temperature is below 0°C (condition one) and the water is pure (condition two), a truth seems to be stated. Add a third condition of high pressure, and the first statement with the two conditions becomes false; it is not universally true. Everyone who has ice skated knows that if pressure is applied to the ice by the blades of one's skates, effortless gliding on the ice is possible. Liquefaction of the ice is what occurs. Since one can never be sure that all possible conditions are identified, a negative hypothesis is not provable and a negative conclusion is invalid as a universal conclusion. The maximum possible pressure-volume work generated by isothermal fluid expansion is true. For an engine cycle to be maximally efficient, it must also have a minimum amount of wasted heat and work to accomplish the necessary compression for a complete cycle. Carnot's theorem does not address this issue at all. Isothermal compression work is nowhere near the least work process for compression and leaves Carnot's claim very vulnerable to error.

The second error is the intermediate conclusion that the work of an engine must be proportional to the absolute temperature differences according to the KTG. There are three arguments against this second error.

1) The conclusion is not logical. The conclusion does not follow directly from the premises. Heat does not equate with work, the necessary condition for that conclusion to follow from the premises. It cannot be proven that the work of an engine must be proportional to its absolute temperature difference under all conditions, which sounds like an exclusion. 2) Work is not a state variable and cannot be defined from beginning and ending states. 3) For work to be proportional to temperature, work must come from the thermal, internal energy of a working fluid according to the KTG. As pointed out, isothermal work does not come from the internal energy of the working fluid, even though isothermal processes conform to the KTG model.

The third error is that the KTG has limited applicability to engine processes. An engine with a process which does not conform to the KTG is not bound by Carnot's theorem. Potential engine processes exist which do not conform to the KTG.[2]

This paper serves as reason to believe that new concepts in thermodynamics exist beyond the Carnot barrier.

References

1. Bueche, F.J. 1975. *Introduction to Physics for Scientists and Engineers*, McGraw-Hill, 299-310.

2. Rauen, K.M. 1997. "A Unity Engine," *Infinite Energy*, **3**, 15/16, 109-112.

About the Author

Ken Rauen is a chemist by education and an engineer by experience. His education launched him into the realm of engineering. Diverse experiences in manufacturing, research and development, industrial process control, industrial hygiene, and work in hydroelectric and steam boiler generating stations has bolstered his present profession as a researcher in alternative energy. He is now a Senior Research Scientist at New Energy Research Laboratory in Bow, New Hampshire.

*E-mail: krauen@infinite-energy.com

New Energy Times Archive

Amin Cycle Demonstrates Entropy Decrease

Ken Rauen*

Inventor, engineer, and Chief Executive Officer of Entropy Systems, Inc. (ESI), Sanjay Amin (see Figure 1), has done what has been traditionally believed to be impossible: to spontaneously reduce the entropy of a working fluid and its surroundings by converting ambient heat into mechanical work. The general understanding of the Second Law of Thermodynamics and its corollary, Carnot's Theorem, states that the heat of the environment is unavailable, that it cannot do any work. The Kelvin-Planck Statement says it succinctly, "It is impossible to construct an engine that, operating continuously, will produce no effect other than the extraction of heat from a single reservoir and the performance of an equivalent amount of work." See my critique of Carnot's theorem in this issue (p. 47) for a clear understanding of the classical theory and its errors and limitations. In controlled, repeatable, laboratory conditions, ESI has demonstrated beyond a reasonable doubt that ambient heat can indeed do useful work. ESI is selling a laboratory demonstrator, the model ESI-22, for $75,000. See their website at www.entropysystems.com. The compelling lab data is published there. Figures 2 and 3 are photographs of the device.

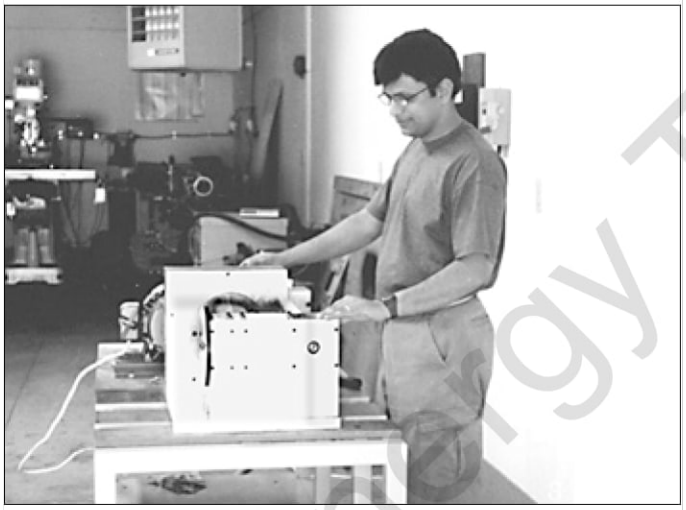

Figure 1. Sanjay Amin of Entropy Systems, Inc.

(Entropy photos and figures are courtesy of their website—www.entropysystems.com.)

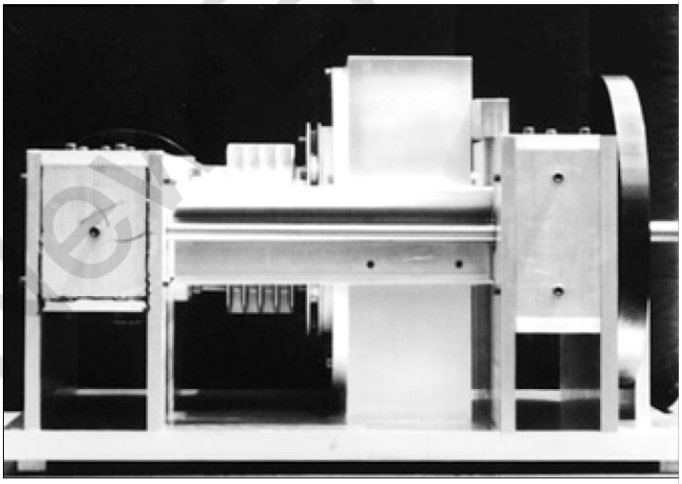

Figure 2. Prime view of the ESI-22.

I spoke with Sanjay at length about his laboratory data. I am convinced that he has done what he claims. Though this is not a stand-alone engine, it is a device in which it is clearly demonstrated that work is generated by the working fluid inside of it at the expense of the surrounding thermal environment, without the rejection of any heat from the working fluid in the process of generating the work.

The ESI-22 is a mechanical load for an electric motor which can operate strictly as a mechanical load, or operate with an Amin cycle engine within the mechanical load. It is a shaft-driven piston device which resembles an air compressor, but the air inside the single cylinder is captive and there is no intake or exhaust. It has an auxiliary process which can be turned on to generate work by the Amin cycle inside the device to reduce the mechanical load to the motor. The work generated is smaller than the work dissipated by the mechanical load, so this prototype does not have work output and is not an obvious engine. I see the Amin cycle engine in an embryonic state, in a mechanical womb, so to speak, and it is presently viable only inside that environment. ESI is improving their designs so that the work generated may exceed friction and other losses. Sanjay's engines have not yet reached the self-running stage, at least as far as he has told me. He assures me ESI has gone far beyond the ESI-22 prototype stage, but that information is proprietary. The ESI-22 provides a repeatable, irrefutable, guaranteed demonstration to anyone who will pay the price. (*Infinite Energy* and New Energy Research Laboratory have not purchased one of these demonstrators, and do not intend to do so. They accept my assessment that the data collected by ESI is sound.)

I believe ESI has achieved its claim because of two interrelated facts. The portion of the internal air volume inside the ESI-22, which is free of internal, moving parts, has been extensively probed with thermocouples with the modifying process on and off. The temperature of the air inside the ESI-22 rises well above the external air temperature when the ESI-22 is only a simple mechanical load. When the modification creating the Amin cycle inside this mechanical load is turned on, the temperature of the air inside the cylinder falls to 3.8°F below the temperature of the air outside the ESI-22. The 3.8° decrease is average cycle temperature. The

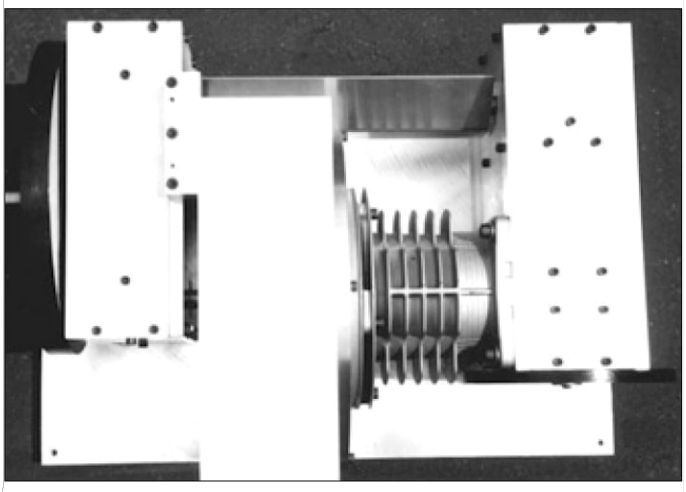

Figure 3. Top view of the ESI-22.

New Energy Times Archive

machine operates at 3000 rpm, which is too fast for any thermocouple to register cycle fluctuations. The second fact is that the motor load, measured as torque times rotational speed, decreases when the Amin cycle is "turned on." If this were just refrigeration taking place, the load would increase. The straight mechanical load of 394 watts decreases to 318 watts when the Amin cycle is "on." Since the observed cooling is not refrigeration, and the cooling occurs below room temperature (which is the lowest temperature around the device), and heat can only flow "down hill," there is no net heat rejection from the working fluid in each cycle and the work generated (76 watts measured as the drop in motor load) must be the unity conversion of heat into work. In anticipation of objections to these conclusions, it is true that the working fluid does consume work and reject heat during the compression portion of the Amin cycle, but the net work of the Amin cycle is work generated, and the rejected heat from compression is recycled by temporary storage in the thermal mass of the ESI-22. The complete conversion of heat into work in an engine is a net reduction in entropy, which classical thermodynamics says is impossible. Heat has entropy and work does not, so the end effect is a reduction in entropy. A classical engine does create work, but that reduction in entropy is more than offset by an increase in the entropy of the heat which "falls" in temperature and is wasted from the engine. A net entropy decrease has now been demonstrated to be possible in a heat engine, although within very special conditions. I do not believe the experimental setup's calibration of thermocouples, torque strain gauges, and rpm meters can be inaccurate enough to invalidate the measurements. The measurements are significant, the calculations are correct, and the conclusions are valid. Sanjay and company have converted heat into work at unity efficiency and with a decrease in entropy of what would be theoretically defined as an isolated system, "violating" or extending our knowledge of the Second Law of Thermodynamics.

I will give a short introduction to the Amin cycle here. See the website (www.entropysystems.com) for complete details. The Amin cycle resembles the Stirling cycle. The Stirling cycle is composed of four steps:

1) isothermal (same temperature) expansion with heat input,
2) isovolumetric (same volume) cooling,
3) isothermal compression with heat output, and
4) isovolumetric heating.

The Amin cycle differs from the Stirling by introducing controlled motion of the working fluid, which is air in ESI's application, during the isovolumetric steps. A swirling motion of the air inside the cylinder gives order to the air (it is moving predominantly in one direction) and this increased order is a decrease in entropy of the enclosed air. In the ESI-22, a larger diameter cylindrical chamber above the piston's cylinder contains rotating vanes which control the swirling. The isovolumetric step after the expansion step increases the swirling; the isovolumetric step after the compression step decreases the swirling. The expansion step sees air swirling slowly or not at all. The compression step sees air swirling at high speed. The result of the swirling is that centrifugal action creates a pressure difference between the diameter of the cylinder and the center of the cylinder. Since the piston is exposed to the center of the air rotation chamber, compression will see lower pressure than expansion. The average pressure difference between expansion and compression is created by this change in rotational kinetic energy of the air and is what allows the engine to do work. In theoretical simplicity, the rotational kinetic energy transforms to and from heat in the isovolumetric steps, and the heat comes from and goes to the large thermal mass of the engine isothermally. In practice, the kinetic energy of rotation comes from and goes to mechanical work of the rotating vanes. Ideally, this interchange of energy is reversible. In practice, it is inefficient and ESI has their hands full trying to improve this transformation. The mechanism of the ESI-22 accomplishes the rapid increase and decrease in rotating vane speeds by the use of elliptical gears, a detail not shown in the drawings provided by ESI, and reproduced here as Figure 6. Figures 4 through 8 are engineering drawings of the ESI-22. Since the isovolumetric processes are also isothermal, the entire Amin cycle operates at one temperature, and also departs from the Stirling cycle in this regard.

This phenomenal achievement has been anticipated. Sanjay brought this concept to Youngstown State University, where he studied engineering, and the University found it to be valid. After Sanjay graduated, YSU was so convinced of the soundness of the Amin cycle that the University backed him financially to form Entropy Systems, Inc. Two patents have been issued, U.S. No. 5,547,341 and 5,765,387. The patents describe one heat pump design which appears to be composed of standard thermodynamic elements: a centrifugal air compressor and a turbine expander. Sanjay explained to me the details which are lacking in the patents. In my opinion, the patents are not "enabling" because of these omissions. The compressor has heat transferred out through the impeller, which is the rejected heat of the heat pump. The impeller does not have a diffuser, so the kinetic energy imparted to the air by centrifugal action remains kinetic energy and is not transformed into increased pressure. The fast moving air is then passed through a turbine to remove the kinetic energy as work. The end result is chilled air at the same pressure as the inlet air. This is a heat pump and therefore requires energy input. ESI has built prototypes of this patented device, but commercial versions are not available. Sanjay told me that these heat pumps or air conditioners have meager output and will only cool a small room. They have a coefficient of performance (COP) of 1.3 to 1.8:1.

I have also anticipated the ESI achievements. I published an article in 1997, "Unity Heat Engines" (*Infinite Energy*, **3**, 15/16), which stated that heat engines which contain nonthermal processes are not bound by Carnot's theorem. The Amin cycle fits this description. My non-Carnot-limited engine cycles are different from the Amin cycle, but conform to the same basic concept that entropy does not have to increase. NERL is working on a prototype of one of my designs. For clarification, I have gone into print with statements that my engines will have zero entropy changes; this is not different from Sanjay's claim of negative entropy changes. The explanation is that I am talking about the eventual dissipation of the work back into heat. Sanjay is only talking about the moment that the work is generated. Unlike the field of chemically-assisted nuclear reactions ("cold fusion"), it is clearly understood what is going on with these engines.

The achievements of well-established, modern science have silently pointed the way for these new developments in thermodynamics. A summary of what I am aware of is listed here:

1) The Second Law analysis of a working fluid which undergoes an isovolumetric heating process which is heated by a regenerator with a thermal gradient within itself, which matches the temperature changes of the isovolumetric process, has a *negative* isolated system entropy change. The Stirling cycle has this behavior. This is not merely theoretical; it is also actual.

2) Thermoelectric junctions which exhibit a cooling Peltier effect undergo a *negative* isolated system entropy change. The low temperature side of a thermoelectric heat pump exhibits this phenomenon most clearly to the average person: heat is completely converted to work and no heat is rejected in this conversion process. This is theoretical and actual.

3) *The McGraw-Hill Encyclopedia of Science and Technology* (Eighth Edition, Volume 18, pages 293 and 294) shows an effi-

New Energy Times Archive

ciency equation for thermoelectric generators which includes a term in the heat input value which is a reduction of heat input by half of the electrical resistance heat liberated in the conductors. This means this heat is conducted back to the normal heat input side to go through conversion to electricity again. When this recycling process is looked at from initial heat entry into the high temperature junctions to the re-entry of the heat, this series of changes has an entropy change of *zero*, and it happens in real world conditions.

These facts have been staring us in the face for decades. Why have scientists not taken notice or not acted upon these revelations? Hats off to Sanjay for seeing similar but different facts of nature and acting on them.

The ESI website contains the theoretical description of the Amin cycle, in both layman's language, and in fine, profuse detail for the engineer. The website also includes a lengthy and delightful historical account of the development of thermodynamics, paralleling the book, *The Refrigerator and the Universe*, by Inge and Martin Goldstein. (See my book review in this issue, p. 46.) Sanjay Amin has also published a book, entitled *Entropy: The Key to Unlimited Resources* (Entropy Publishing, 29 E. Front Street, Youngstown, OH 44503), which covers the same material as the website, minus the recent lab data, plus some philosophical insights. ❑❑❑

*krauen@infinite-energy.com

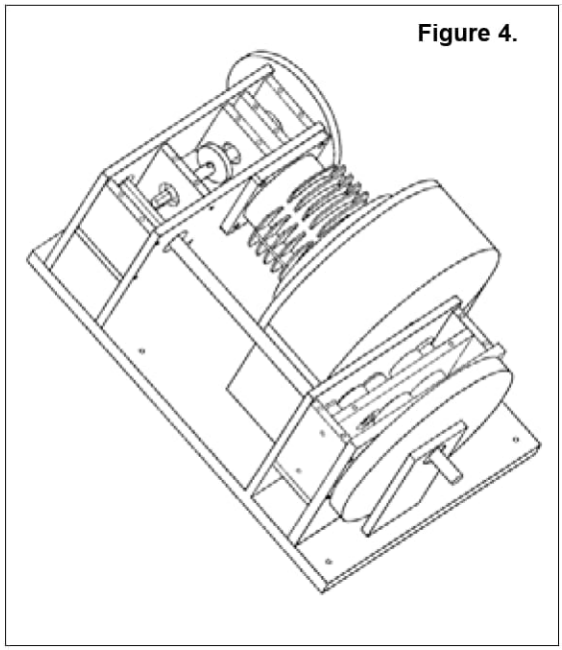
Figure 4.

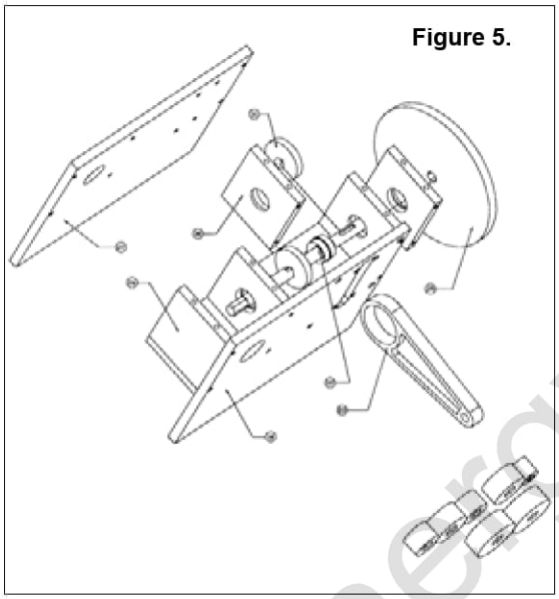
Figure 5.

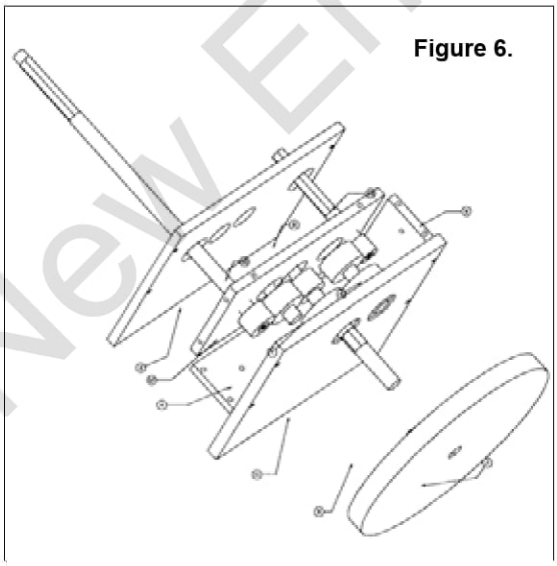
Figure 6.

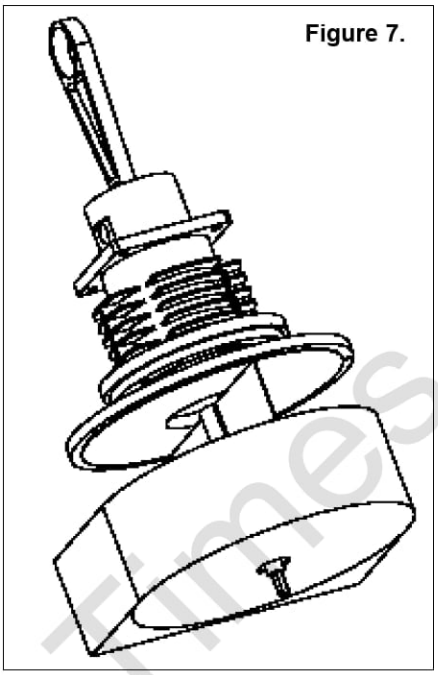
Figure 7.

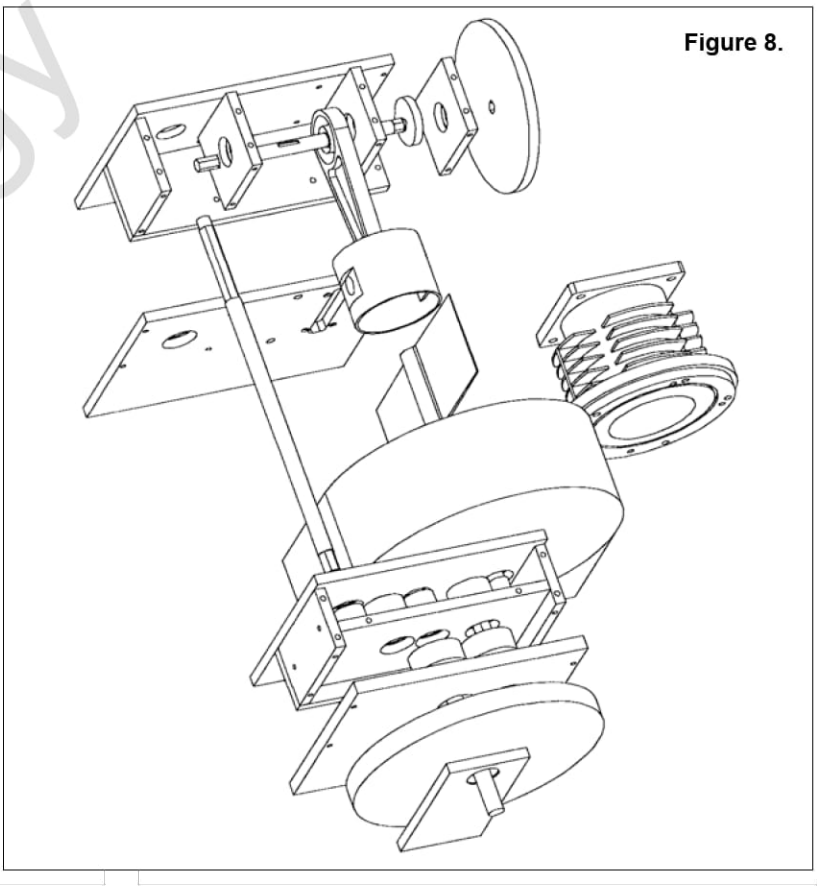
Figure 8.

New Energy Times Archive

Device and Process Testing Update

Ed Wall

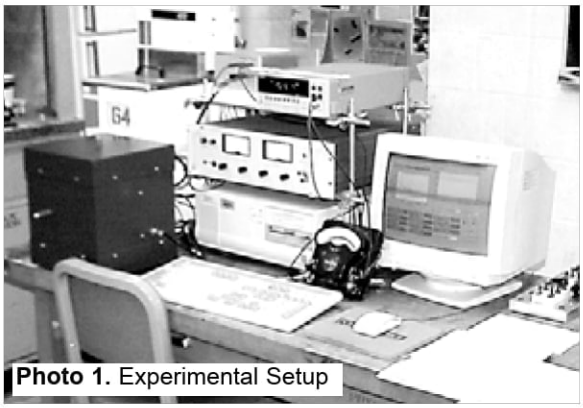

Photo 1. Experimental Setup

Portland State University Visit

What can a person like myself, with limited knowledge, do to know with a high degree of certainty whether cold fusion is a figment of collective imagination, a scientific curiosity of questionable validity, a remarkable anomaly with unexplored application, or something an engineer would find useful?

It was with this certainty of uncertainty that I decided to undertake the task of proving to myself that cold fusion excess power exists. If I did not succeed and gave up, I would be no worse off in satisfying my desire to know. Reviewing the literature that shows positive results impressed me deeply, but such information is necessarily second-hand, even when highly credible, and did not seem to be adequate to convince crucial skeptics.

I recently visited Professor John Dash's lab at Portland State University in Oregon. He and his group have been experimenting for many years on electrolytic cold fusion cells with titanium cathodes and platinum anodes. I went in mid-December, at a time of year when his typical group of college, graduate, and high school students were not congregating in the lab and I was able to have the attention of doctoral student Jon Warner. Warner has mentored five high school students over the past two years in performing experiments designed to find evidence for cold fusion. His Master's dissertation was based on cold fusion research.

Dr. Dash impressed me as a quiet and careful researcher, quite friendly and thoughtful, but stern, not allowing his students to wander, insisting on clear-minded effort to build consistent evidence. He is a physics professor and metallurgist, specializing in the use of a scanning electron microscope (SEM) which has an energy dispersive spectrometer (EDS). Besides the typical sorts of pictures we know from SEM's, the EDS allows for precise element identification in a very specific area of the cathode target, easily controlled by the operator.

Up until 1999, this group has done isoperibolic calorimetry. This isoperibolic calorimeter involved seven identical cells wired electrically in series, so that electrical current was always the same through each of the cells. Cell power was controlled by varying voltage across the electrodes by changing the area of an electrode exposed to electrolyte. This is a less than ideal approach, requiring a lot of monitoring, but by maintaining the electrode voltage of the test cell below the voltage into the control cells, a useful comparison results. The test cells usually showed higher temperatures than the control cells, even with consistently lower power consumption. The experiment incorporated a reproducibility test, having two cells each with titanium cathodes with a particular degree of lattice disorder, which is induced by means of cold rolling. This seems like an excellent experiment to do on a tight budget (provided you know someone who can provide the cell materials).

Warner is a very energetic and focused investigator. He is very glad to be working with a system they have had in use for a short series of experiments that are built around a Seebeck Envelope Calorimeter (SEC or Calvet calorimeter, see Photo 1). This device is widely regarded as the highest quality means of determining heat data from a reaction under test, in this case, an electrolytic cell with titanium cathode and platinum anode.

The calorimeter is a product of Thermonetics, Inc.[1] (See Photo 1.) It has won high praise from cold fusion scientist Ben Bush, Ph.D., University of Texas at Austin. The device is capable of precisely measuring a very wide range of heat values. Judging from Warner's calibration data, the instrument does not drift much. Warner does perform many calibrations, at many different power levels. He calibrates with three methods: a resistance heater provided by the manufacturer; a resistance heater suspended in water in a beaker to get an approximate equivalent heat capacity as a test cell; and an electrolytic cell, with two platinum electrodes. All three methods produce nearly identical slope and offset constants. Unlike a flow calorimeter, the SEC is a solid-state device that does not depend on pumps, the temperature sensing of fluids, or the measurement of the flow rate of fluids. It is more precise, accurate, reliable, and sensitive than a flow calorimeter.

When I arrived, their usual test cell with a titanium cathode, platinum anode, and acidic electrolyte (H_2SO_4) was running. It showed an excess heat of ~0.2 W. This was with an error margin of +/- 0.022 W. There are redundant methods of voltage and current measurement. The unit used for acquiring data is a Keithley 2000-20.

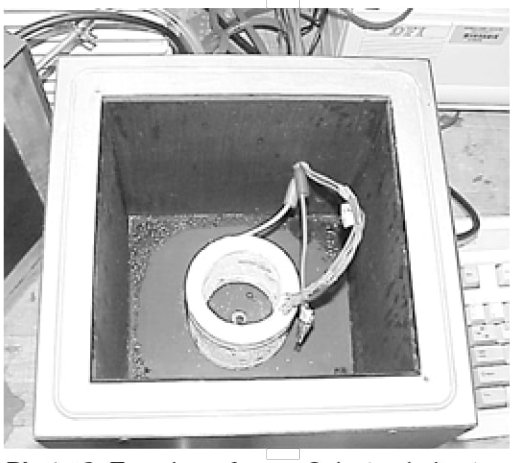

Photo 2. Top view of open Calvet calorimeter, showing concrete sleeve for holding thermocouples.

SEC Calibration and Theory of Operation

The way the SEC works is by a long, long series circuit of thermocouples. Each thermocouple produces a small voltage that is a function of its temperature. The thermocouples are assembled in a zig-zag between the inside container and the constant temperature reference, which is fixed temperature flowing water bath. Every other thermocouple is touching the inner surface and the rest of them are at the reference temperature, maintained by flowing water. If there is no heat produced within the device, there is no heat flow through the insulated calorimeter walls, so no temperature difference exists between the reference bath and the calorimeter inner wall. The sum of all the thermocouple voltages nulls

New Energy Times Archive

(ideally) under these conditions because every thermocouple has an opposite polarity from its neighbors. So, for an even number of thermocouples, all with the same voltage, the series sum is zero. No matter where heat is developed in the calorimeter, it must exit through the wall, where it will contribute to a temperature gradient across the wall. The thermocouples integrate those many contributions in a very predictable fashion, and the cell calibration can apply at a range of power levels, as Jon Warner's calibration checking shows. His slope and offset are very close to those provided by the manufacturer. There will be some variation from manufacturer's specified calibration constants because the wires that provide power for cell electrolysis and for sensing cell temperature can conduct a small amount of heat in a way that varies with ambient temperature; this sneaks around the intended heat detection. This heat can be taken into account by calibration once the calorimeter is operating.

Warner has made a cement sleeve to encase thermocouples for maintaining the positions of several thermocouples against the cell outer wall. This gives them a means to monitor cell performance and determine if the recombiner is functioning. The sleeve is visible in Photo 2.

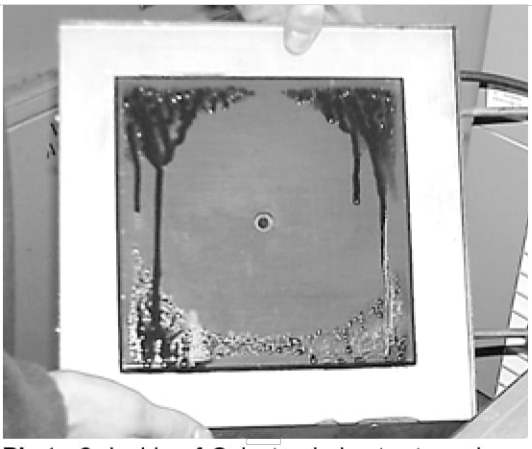

Photo 3. Inside of Calvet calorimeter top, showing apparent condensation

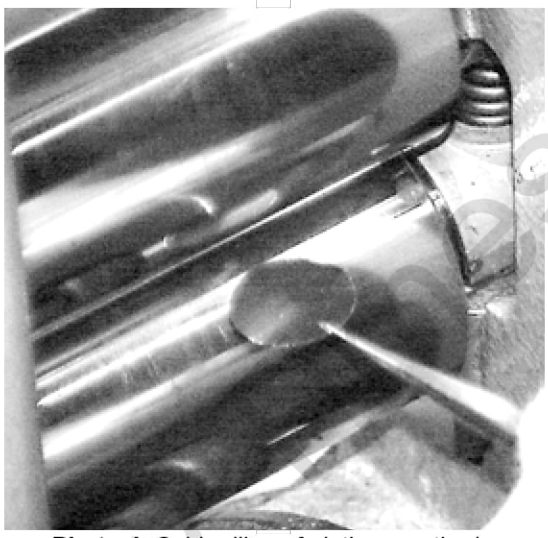

Photo 4. Cold rolling of platinum cathode.

Intended Null Run Produces Heat

An unexpected event occurred during an overnight calibration run. We saw a control platinum-platinum cell seem to develop around 0.2 W of excess heat on an overnight run. The cathode had been used extensively and surprisingly began developing the excess heat.[2] Dash refers to those phenomena in a published paper of earlier research, consistent with the work of Ohmori and Enyo.[3] The latter researchers detected excess heat using gold cathodes, another noble metal which does not absorb hydrogen. So most people assume they cannot produce the cold fusion effect with such cathodes. When we replaced this "active" calibration cell with one we made that was essentially identical, except for a new, unelectrolyzed platinum electrode, the excess heat disappeared. Dr. Edmund Storms has also recently expressed similar indications that he is currently studying in his experiments, in which excess heat is found with a platinum cathode. He writes that it seems to be dependent on some unknown contamination, making it hard to reproduce.[4]

Titanium May Make a Good Demonstration Cell

These cells seem well-behaved for demonstration purposes. They typically begin producing excess heat as soon as steady state conditions are reached (about two hours). They will then run for as long as eight days (so far). Calibration and test cells are weighed before and after a run. Typical water loss is around 1 ml/day. A little water, which is apparently from the cell, appears on the insides of the calorimeter (see Photos 2 and 3). The unit is sealed.

Warner gave me a chance to use their SEM/EDS. We examined the platinum cathode that was producing excess heat and something was found that might be due to a small melting event. The entire metal surface that was observed had sharp edged features, but one pit had rounded edges that would not sharpen with focusing, so it had apparently melted.

Dr. Dash and Jon Warner have agreed to help us in our efforts to replicate this experiment. We have placed an order for a new Calvet calorimeter, which will take around two months to fulfill. In the meantime, we are preparing to do some related studies.

Case Cell Results

A sample of the cell gas was taken with a specially designed sampling canister and sent to Drs. McKubre and Tanzella at SRI. They agreed to evaluate it for helium content. In the last issue of *Infinite Energy*, the initial deuterium gas sample evaluation results (from before the cell was run) from SRI were described as having very low helium concentration. The final gas sample also revealed essentially no helium. This was disappointing, but something of a relief, because the flow calorimeter did not show perceptible excess heat. It seems that the steadily rising catalyst temperature that was found did not cause helium production, that these two phenomena may be separate. At this point, further work with the Case Cell is likely, but is delayed due to moving it from the old laboratory to our new facility. It will have to be reassembled, tested, and calibrated before another run is started.

References

1. Thermonetics, Inc. http://www.electriciti.com/~thermo/hft.html
2. 1996. "Progress in New Hydrogen Energy," Proceedings of ICCF-6, **2**, p. 477.
3. Mizuno, T. 1998. *Nuclear Transmutation: The Reality of Cold Fusion*, Infinite Energy Press.
4. Private Communication.

21st CENTURY SCIENCE & TECHNOLOGY

Winter 1999 - 2000 Features

- The Swindle of Special Relativity *by Laurence Hecht*
- The Singing Voice Demands C = 256 Hz *by Kathy Wolfe*
- Champollion and the True Story of Egypt *by Muriel Mirak Weissbach*
- Barry Fell, Epigrapher: Biography of a Renaissance Man *by Julian Fell*
- The Global Warming Folly *by Zbigniew Jaworowski*

Subscribe! $25 for 6 issues (U.S.)
$50 for 6 issues (foreign); Single copies $5 ($6 foreign)
Send check or money order (U.S. currency only) to
21st Century, P.O. Box 16285, Washington, D.C. 20041

New Energy Times Archive

A Theoretical Model for Low-Energy Nuclear Reactions in a Solid Matrix

K.P. Sinha*

Editor's Note: It is our honor to have so distinguished a theoretical physicist as Dr. K.P. Sinha provide us with the following model for cold fusion in a solid matrix. Dr. Sinha finds that he can explain both deuterium-based and protium-involved fusion occurring in the crevices, voids, or linear channels of metallic cathodes—without recourse to what might be called radically new physics. As such, he is in league with Nobel Laureate Julian Schwinger and Drs. Scott and Talbot Chubb and others who attempt to explain cold fusion from the perspective of what is already known in advanced solid-state physics. It is interesting that Dr. Sinha brings to the problem of cold fusion a deep understanding of superconductivity. It was my good fortune to have met Dr. Sinha at the COFE conference last spring.—*EFM*

Abstract

A theoretical model for low-energy nuclear reactions in a solid matrix, having crevices, voids, or empty channels which can harbor light atoms (such as D or H), is presented. The central idea involves the concept that an electron, or electron pairs, located around the proton or deuteron and interacting with high frequency modes of the system, can acquire heavy effective mass and the corresponding atoms or ions are "squeezed" to much smaller size. The electron pair (with spin S = 0) behaves like a composite boson and pulls another proton or deuteron by lowering the Coulomb barrier and takes advantage of the attractive nuclear force, leading to fusion. Numerical estimates are given for the D(+) - D(-) system after developing the model. It gives achievable fusion reaction cross section if conditions envisaged exist in the solid matrix.

Introduction

Even ten years after the announcement of the discovery of the phenomenon of low-energy nuclear reactions (so-called cold fusion),[1,2] the scientific community is divided into two camps: non-believers (majority) and believers (minority). The main obstacle towards universal acceptance has been the lack of reproducibility of the effect as claimed by many laboratories. Nevertheless, over 600 papers emanating from 200 laboratories in thirty countries report replication and even improvement over the results obtained by Fleischmann and Pons.[3-10] A very succinct answer to the critics of cold fusion was given by the late Julian Schwinger in 1995.[11] His thesis was that the conditions of cold fusion occurring in a solid matrix are radically different from fusion taking place in a hot plasma and, hence, the mechanisms of the two phenomena may differ. The hot fusion reaction involves electric dipole radiation, causing the reversal of the parity of the particle system. In the low-energy nuclear reaction two deuterons, carrying even parity, can fuse only to the orbital state of zero angular momentum of even orbital parity. This would lead to an excited state of ^{4}He having even parity which may radiate to the first excited or the ground state of ^{4}He. Both have even parity. These transitions will be possible by other mechanisms, such as quadrupole radiation.

The important point to note is that the low-energy nuclear reaction takes place in a heavily loaded solid matrix (such as palladium, titanium, or nickel and some ceramic oxides). The deuterium or hydrogen systems occupy crevices, voids, or channels in the crystalline matrix, where they are subject to lattice forces and are also free to move close together finding the right conditions to do so.

In the present paper a theoretical model is considered in which such conditions can be produced. Unlike some other theoretical models that invoke some very outlandish ideas, the present model to be discussed is in conformity with basic laws of physics operating in crevices, voids, or channels in a solid matrix that can sustain unusual conditions.

The Model

Although the idea of the model came to the author in 1989 upon learning about the discovery of low-energy nuclear reactions, the spate of statements from scientists (working in prestigious laboratories) that the phenomenon was not reproduced by them, acted as a deterrent to writing this paper. However, a few sentences about the model were given in the obituary of the late Professor Sir Charles Frank which the author wrote in 1998,[12] apart from ventilating the essential ideas occasionally in meetings of scientists from 1989 onwards. Frank was among the first few who suggested in 1947 that the transient formation of muonic hydrogen or deuterium atoms will facilitate cold fusion, which was later accidentally confirmed by L. Alvarez in 1957.[13,14]

The central idea of the model is that an electron, or electron pairs, located on the proton or deuteron and interacting with high frequency modes of the solid material (phonons or ionic plasmons), can acquire heavy effective mass, and the corresponding atoms or ions are squeezed to much smaller size. Such tightly bound electron pairs will have integral spin (S = 0) and behave like local charged bosons (acronym "lochons"). The small ions can be called bosonic ions and the composite boson (electron pair) can pull towards it another proton or deuteron, overcoming Coulomb barrier and taking advantage of the attractive nuclear forces leading to fusion.

The role of such charged bosons (local pairs) in enhancing superconducting transition temperature of some superconductors was suggested by myself and others as far back as 1966.[15]

It is found that free fermions (electrons or holes) interacting through lochons provide the dominant pairing mechanism for the high temperature oxide superconductors (cuprates)[16] and even for hydrogen or deuterium loaded PdHx or PdDx superconductors. In the context of cold fusion it is the interaction between two nuclei in {H(+)-D(-)}, {D(+)-D(-)}, {D(+)-H(-)}, via local charged bosons (electron pairs) sitting on the lowest electron pair states of H(-) or D(-) as a result of coupling with the appropriate modes of the system in question, that leads to their coalescence. The above entities are located in the crevices, voids, or linear empty channels of the solid and are not constrained to occupy lattice sites of the host.

It was believed that in Pd/H and Pd/D systems the H and D are present as H(+) and D(+) nuclei and are highly mobile.[17] However, in the nuclear-active systems the D/Pd ratio is quite high (>1.5), and it is proposed by some workers that the active phase should be PdD (2+x).[5]

Hence, it is to be expected that there are some species such as atoms D and ions D(-). Let us consider a D atom in a linear chainlet of deuterons D(+). The Hamiltonian for such a system is

$$H = H(el) + H(L) + H(eL) + C, \quad (1)$$

where

$$H(el) = \sum_s E_m C^*_{ms} C_{ms} + \sum(n \neq m,s)\ t\ (mn)\ (C^*_{ms} C_{ns} + h.c.). \quad (2)$$

In Equation (2), $C^*_{ms}(C_{ms})$ represents creation (annihilation) operators for an electron having spin s in a Wannier state |m> at site m of the chain. It has basically 1s atomic-like orbital (hydrogenic) character. E_m is the on-site single particle energy of the electron, and t(mn)= - |t| is the nearest neighbor hopping (transfer) integral.

New Energy Times Archive

$$H(L) = h^* \omega_d \sum_m (d^*_m d_m + 1/2) \quad (3)$$

H(L) is the lattice Hamiltonian of the vibrating chain, where h^* is the Planck's constant divided by 2π, ω_d is the frequency of D, and $d^*_m(d_m)$ is the phonon creation (annihilation) operator.

The interaction of the electron with phonons is given by

$$H(eL) = -gh^*\omega_d \sum_s C^*_{ms}C_{ms} (d^*_m + d_m), \quad (4)$$

where g is a dimensionless coupling constant. C in Equation (1) represents a constant energy arising from negative space charge in the crevice, void, or channel which compensates for the positive charge of the linear chain. By making use of a suitable unitary transformation,[18,19] the lattice Hamiltonian is transformed into a displaced harmonic oscillator ($d_m \rightarrow (d_m + \delta)$).

$$H(Lm) = \sum_m h^*\omega_d [(d^*_m + \delta)(d_m + \delta)] - h^*\omega_d |\delta|^2, \quad (5)$$
$$\text{with } \delta = g\sum_s < C^*_{ms}C_{ms}> \quad (6)$$

where $< C^*_{ms}C_{ms}>$ denotes the occupation number of the electron with spin s at atom m. The displacement of the equilibrium position of the Einstein oscillator

$$X_d = g\,(h^*/2M_d\,\omega_d)^{1/2}, \quad (7)$$

where M_d is the mass of the oscillator. The transformed Hamiltonian is

$$H(T) = \sum_s E^*_m C^*_{ms}C_{ms} + \sum_{n\neq m} t^*(mn)\,(C^*_{ms}C_{ns} + h.c\,)$$
$$+ h^*\omega_d\sum_m[d'^*_m d'_m + 1/2] - h^*\omega_d g^2\sum_s <C^*_{ms}C_{ms}> \quad (8)$$

and the hopping integral is transformed to

$$t^*(mn) = t(mn)\exp(-g^2);\ E^*_m = E_m - E_d. \quad (9)$$

This leads to exponentially reducing the electronic level width. The lowering of the energy of the single electron on atom m is due to local displacement of atoms

$$E_d = g^2\,h^*\,\omega_d. \quad (10)$$

This leads to an increase of its effective mass m^* which turns out to be

$$m^* = m_e \exp(E_d/h^*\omega_d) = m_e \exp(g^2). \quad (11)$$

This is independent of the frequency and mass of the oscillator; it increases exponentially with the increase of g^2. These results are valid for $h^*\omega_d >> k_BT$, where k_B is the Boltzmann constant. With increase in temperature the cloud of vibrational quanta around the electron will increase and render it more localized, and the size of the atom at m will shrink further. For finite temperatures the coupling constant $g^2(0)$ changes to

$$g^2\coth(h^*\omega_d/2k_BT).$$

When the atoms are located on regular crystal lattices, the shrinking in their size due to the interactions noted above is constrained by the lattice constants.[20] In the present situation, when the chains of deuterons lie in crevices, voids, or empty channels of the solid matrix, the conditions are different. They will have their own spacings in the chain. A simple way of finding the size of the atom at m under the displacement of surrounding atoms can be determined from the energy

$$E(x,r) = h^{*2}/2m^*r^2 - e^2/\varepsilon r - x\omega_d(2M_dE_d)^{1/2} +$$
$$(1/2)M_d\omega_d^2x^2(r/l)^3, \quad (12)$$

where r is the radius of the atomic sphere at site m, l is the internuclear distance in the chain, and ε is the high frequency dielectric constant.

Minimization of E(x,r) with respect to x gives

$$x(m) = (2E_d/M_d\,\omega_d^2)^{1/2}\,(l/r)^3 \quad (13)$$

and the energy at the minimum is

$$E(x(m),r) = h^{*2}/2m^*r^2 — e^2/\varepsilon r – E_d(l/r)^3. \quad (14)$$

The above expression has minimum at r = 0 and the electron should collapse into a point irrespective of the value of E_d. However, the internuclear separation intervenes.

To see the role of l, E(x(m),r) is minimized with respect to r. This leads to the condition

$$(e^2/\varepsilon)r^2 - (h^{*2}/m^*)\,r + 3E_d\,(l)^3 = 0. \quad (15)$$

The solution of this Equation for r yields

$$r = [(h^{*2}/m^*)+_\{(h^{*2}/m^*)^2–12(e^2/\varepsilon)E_d(l)^3\}^{1/2}]\ /2(e^2/\varepsilon) \quad (16)$$

when l = 0, r(-) = 0, and r(+) = $(h^{*2}/e^2)\,(\varepsilon/m^*)$.

For non-zero l, the condition that Equation (14) does not give a complex r with an imaginary part yields the relation

$$l_c \leq [(h^{*3})\varepsilon/12g^2\omega_d e^2\,m^{*2}]^{1/3}, \quad (17)$$

where we have used Equation (10), that is $E_d = g^2h^*\omega_d$. Thus, the maximum allowed value of l_c is when the equality in Equation (17) holds. The corresponding value of r turns out to be

$$r(m)_+ = (1/2)\,(h^*/e)^2\,(\varepsilon/m^*). \quad (18)$$

The extreme solution $r_- = 0$ for $l_c = 0$ will not be considered further. The range of values for $r(m)_+$ and $r(m)_-$ turn out to be

$$(1/2)\,(h^*/e)^2\,(\varepsilon/m^*) < r(m)_+ < (h^*/e)^2\,(\varepsilon/m^*), \quad (19)$$

$$\text{and } 0 < r(m)_- < (1/2)\,(h^*/e)^2\,(\varepsilon/m^*). \quad (20)$$

For making an estimate of these quantities, the following choice of various parameters, based on available data, is made: $E_d = 0.33$eV, $\omega_d = 10^{14}$ sec^{-1}, and $\varepsilon = 2$. Thus we have $g^2 = E_d/h^*\,\omega_d = 5.3$. The effective mass of the electron at m becomes

$$m^* = m_e\exp(5.3) = 200m_e. \quad (21)$$

Putting these values in Equation (17) gives $l_c \leq 3(10)^{-10}$ cm. It is reasonable to choose the largest value of Equation (20) and the smallest of Equation (19) which, of course, are identical. It gives:

$$r(m) = (1/2)\,(h^*/e)^2\,(\varepsilon/m^*) = 2\,(10)^{-11}\text{cm}. \quad (22)$$

This radius is of the same order as that for muonic (hydrogen or deuterium) atoms, which are known to be involved in fusion reaction.

Next let us consider the case of two deuterium atoms in a chain of deuterons. The Hamiltonian H(b) for this case can be written as

$$H(b) = \sum_{ms}E_mC^*_{ms}C_{ms} + \sum_{lm,s}t(lm)\,(C^*_{ms}C_{ls}+h.c.)$$
$$+U\sum_m C^*_{m\uparrow}C_{m\uparrow}C^*_{m\downarrow}C_{m\downarrow} — gh^*\omega_d\sum_{ms}C^*_{ms}C_{ms}\,(d^*_m + d_m)$$
$$+ h^*\omega_d\sum_m(d^*_m d_m + 1/2) + C'. \quad (23)$$

The only new term is the Coulomb interaction between two electrons at atom m in the same orbital state |m> but having opposite spin. The effective Hamiltonian is obtained again by the displacement transformation

$$C^{*\prime}_m = C^*_m \exp[-g\,(d_m - d^*_m)].$$

This leads to the change of various parameters as

$$E^*_m = E_m - E_d \quad (24a)$$
$$U^* = U - 2E_d \quad (24b)$$
$$\text{and } t^* = t\exp(-\,g^2), \quad (24c)$$

where $E_d = g^{*2}h^*\omega_d$ gives the electron level shift.

When $U < 2E_d$ the electron pairs form a small on-site localized pair,[21,22] a kind of composite boson. For the occupation number of the electrons $n(m) = \sum_s<C^*_{ms}C_{ms}>$.

Thus we have

D(+) n(m) = 0, the energy E = 0,
D(0) n(m) = 1, the energy $E = E^*_m$

New Energy Times Archive

D(-) $n(m) = 2$, the energy $E = 2E^*_m - U^*$.

This shows that for $E^*_m < (1/2)U^*$, the state with double occupancy D(-) is more stable than the singly occupied state D(0). The total spin of the electron pair is $S = 0$. As they are very tightly bound, the pair can be considered to be a composite boson that may move as one unit if not completely localized on D(-) at site m. In effect the high frequency modes screen the Coulomb repulsion between electrons.

It is expedient to take $U = 0$. A realistic appraisal is to take the residual deformation energy for the electron pair as

$$E^*_d = 2E_d - U.$$

Thus, for the electron pair (b) on D(-) with mass m^*_b and charge 2e at site m we have

$$E_b(x,r) = h^{*2}/2m^*_b r^2 - 2e^2/\varepsilon r - 2x\omega_d[2M_d E^*_d]^{1/2} + (1/2)\omega_d^2 x^2 (r/l^*)^3. \quad (25)$$

Minimization of Equation (25) with respect to x gives

$$x(m) = 2[2M_d E^*_d]^{1/2} / M_d\omega_d(l^*/r)^3. \quad (26)$$

An equation analogous to Equation (15) for the electron pair (local charged boson) is

$$2(e^2/\varepsilon)r^2 - (h^{*2}/2m^*_b)r + 12\, E^*_d l^{*3} = 0. \quad (27)$$

This has the solution

$$r(\pm) = [(h^{*2}/2m^*_b) \pm \{(h^{*2}/2m^*_b)^2 - 96(e^2/\varepsilon)E^*_d l^{*3}\}^{1/2}]/4(e^2/\varepsilon), \quad (28)$$

and for real r the condition now is

$$l^{*3} \le [h^{*3}\varepsilon/384 g^{*2}\omega_d e^2 m_b^{*2}] \quad (29)$$

with the definition $E^*_d = g^{*2}h^*\omega_d$. The range of values for $r(m)_+$ and $r(m)_-$ turn out to be

$$(1/8)\,(h^*/e)^2\,(\varepsilon/m^*_b) < r(m)_+ < (1/4)\,(h^*/e)^2\,(\varepsilon/m^*_b) \quad (30)$$

$$\text{and } 0 < r(m)_- < (1/8)\,(h^*/e)^2\,(\varepsilon/m^*_b). \quad (31)$$

It appears to have the same form as Equations (19) and (20) except for the numerical factor and the effective mass of the charged boson (electron pair) m^*_b as compared to m^*. Further, l^* and g^* will also be different from the single electron case. The value

$$r^*_b = (1/8)\,(h^*/e)^2\,(\varepsilon/m^*_b) \quad (32)$$

will be taken for numerical evaluation. The effective mass m^*_b is given by

$$m^*_b = 2m_e \exp(g^{*2}) \quad (33)$$

with g^* obtained from $E^*_d = g^{*2}h^*\omega_d = [2E_d - U]$. Using $E_d = 0.33$ eV and $U = 0.30$ eV, we get $g^{*2}h^*\omega_d = 0.66 - 0.30 = 0.36$ eV. This gives $g^{*2} = 5.76$ for $\omega_d = (10)^{14}$ sec^{-1} and $m^*_b = 634\, m_e$. Making use of these values we get $l^* \le 1.5(10)^{-11}$ cm and $r_b = 1.6(10)^{-12}$ cm, where r_b is the radius of the bosonic ion (D(-)).

The above calculation shows that if we start with two D atoms in a chain of D(+) in a crevice, cavity, or channel of the solid matrix, the interaction with a high frequency mode and concomitant distortion of the lattice leads to the stability of the bosonic ion D(-) which has a very small size. The reaction $2D \rightarrow D(+) + D(-)$ will be exothermic and lead to the production of heat as the lattice distorts. This will be followed by the fusion of two deuteron nuclei in D(+) and D(-), as they can come very close due to the very small size and considerable screening of the Coulomb barrier in the bosonic ion D(-).

The cross section of low-energy nuclear reaction between D(+) and D(-) will be briefly discussed now. For an incident particle of charge $(Z_a)e$, the penetration factor $v(l,E_a)$ decreases rapidly with decreasing energy E_a; here l denotes the orbital state. In this situation, particles with $l = 0$ contribute the most.[23,24] Thus, the asymptotic expression for $v(0,E_a)$ is given by

$$v(0,E_a) = \text{const.}(E_a)^{-1/2} \exp[-(Z_a e)(Z_b e)/(h^* v_a)], \quad (34)$$

where v_a is the speed of the particle. The cross section of the reaction is given by

$$\sigma(a,b) = \text{const.}E_a^{-1} \exp[-(Z_a e)(Z_b e)/(h^* v_a)], \quad (35)$$

with $E_a \rightarrow 0$. For the reaction between D(+) and D(-), we have to consider carefully the nuclear charge seen by D(+) on D(-) having a pair of electrons with orbital radius $r^*_b = 1.6(10)^{-12}$ cm. The electron pair in the 1s atomic state, squeezed to a very small radius and having adequate amplitude at the nucleus, shields the positive charge. Hence, the effective nuclear charge of D(-) will be considerably reduced. It may even be slightly negative as seen by the deuteron D(+). For D(+) the nuclear charge $(Z_b e) = e$, but for D(-) it may not be $(Z_a e) = e$. It may range from -e to a fraction of e. The energy $E_a = (1/2)M_d(v_a)^2$ can be estimated from the phonon energy $h^*\omega_d$ and the phonon velocity of vibrational modes of the deuteron chain. It is estimated to be of the order $2.45(10)^5$ cm sec^{-1}. This gives (with $M_d = 3.34(10)^{-24}$ gm) $E_a = (10)^{-13}$ ergs. The same value is obtained from $h^*\omega_d$ with $\omega_d = (10)^{14}$ sec^{-1}. In fact, when D(+) and D(-) are moving towards each other, while vibrating, they can come closest. During this the relative velocity will be of the order $v_r = 5(10)^5$. When the effective charge at D(-) as seen by D(+) is negative, there is no Coulomb barrier. Rather, there will be Coulomb attraction. It is known that if the incident ion is neutral the reaction cross section is πR^2, R being the nuclear radius (~$5(10)^{-13}$ cm).[24] The size of the nucleus is determined by R, which is larger than the range of nuclear force.

To get an order of magnitude estimate of the cross section of the D(+) D(-) nuclear reaction in the solid matrix, it is important to have an idea of the effective charge of D(-) as seen by D(+) at various regions of nuclear volume of D(-). The effective charge can be written as

$$Q[D(-)] = Q(b) + e, \quad (36)$$

where e is the charge of the nucleus and Q(b) that of the electron pair (b),which can be expressed as

$$\langle Q(b)\rangle = \int_0^{r_n} Q(b)[\psi(r)]^2\, d\tau, \quad (37)$$

$$\text{where } [\psi(r)] = 1/\{\pi r_b^3\}^{1/2} \exp(-r/r_b) \quad (38)$$

is the wave function of the center of mass motion of the electron pair; $Q(b) = -2e$ and $d\tau$ is the volume element. Assuming that $\psi(r)$ varies very little over the nuclear volume defined by r_n, one gets the simple expression[25]

$$\langle Q(b)\rangle = Q(b)[\psi(0)]^2\,(4/3)\pi r_n^3 = Q(b)(4/3)\,[r_n/r_b]^3. \quad (39)$$

The computed values for various values are given below using $r_b = 1.6(10)^{-12}$ cm.

Table 1.

r_n(in units of $(10)^{-12}$ cm)	Q [D(-)](in units of e)
1.6	-1.66
1.4	-0.78
1.2	-0.122
1.15	0.008
1.145	0.03
1.1	0.134
1.0	0.35

The table clearly shows that as D(+) approaches D(-) it will be attracted towards it, owing to negative effective charge. By the distance the sign reverses, D(+) would gather sufficient momentum to cross the residual Coulomb barrier and come under the influence of nuclear forces. For a rough estimate the absorption (fusion) cross section will be computed for the case when the effective charge of D(-) has become slightly positive

$$Q[D(-)] = 0.03\ e.$$

New Energy Times Archive

Equation (35) can be recast as

$$\sigma[D(-),D(+)] = (\pi/k^2)T_p \quad (40)$$

$$k^2 = [2M_dE/h^{*2}] = M_d^2v_r^2 / h^{*2} \quad (41)$$

and the penetration coefficient T_p, for very low-energy regime

$$T_p\exp(-G), \quad (42)$$

where G is the Gamow factor (for low-energy)

$$G = [Q(D(-))e/h^*v_r] \quad (43)$$

$$= [0.03e^2/h^*v_r]. \quad (44)$$

Using $M_d = 3.34(10)^{-24}$ gm; $v_r = 5(10)^5$ cm sec^{-1}; $h^* = (10)^{-27}$ ergs sec, and $e = 4.8(10)^{-10}$ esu, we have

$$\sigma[D(-),D(+)] = [\pi/2.8(10)^{18}]\exp[-13.8] = 1.14(10)^{-24}\text{cm}^2. \quad (45)$$

This is of the same order as $\pi R^2 \sim (10)^{-24}$ cm^2 estimated for many nuclear coalescence reactions.[23,24,26]

Concluding Remarks

In the foregoing sections, a theoretical model for low-energy nuclear reactions in a solid matrix has been presented. It is envisaged that the solid matrix having crevices, voids, or linear channels provides the right environment for the formation of linear chains of H(+)H(-), H(+)D(-), D(+)H(-), or D(+)D(-) systems in which the H(-) or D(-) ions can be "squeezed" considerably in size. This takes place due to interaction of electrons with the high frequency modes of the system. The electron pairs on D(-) or H(-) are strongly bound and are in the singlet spin state. Such D(-) ions can be likened to bosonic ions. As these light ions or nuclei exist in crevices, voids, or otherwise empty channels of the solid matrix, they can be squeezed and come very close to each other without the constraint of the lattice of the host matrix. The existence of D(-) ions helps in lowering the Coulomb barrier and facilitates fusion reaction. Before the fusion reaction, there can be an exothermic charge transfer reaction involving two deuterium atoms such as

$$2D \rightarrow D(+) + D(-)$$

accompanied with distortion of the environment. In some cases, such heat generation has indeed been observed by a few researchers.[27]

The model calculation for low-energy exoergic reaction induced by bosonic ions such as D(-) (also H-) shows that the cross section of coalescence of two deuteron nuclei is of the right order of magnitude.

The model demonstrates that if such right conditions within a solid matrix exist, low-energy fusion reaction is probable. The lack of reproducibility of such reactions reported by various experimental groups must be due to the difficulty in producing a sample in which the right conditions are generated. The local charged boson (electron pair), accompanied with distortion of nuclear positions, can also form bosonic molecules D-D or D-H with the electron pair pulling together the two nuclei leading to their fusion. This will amount to two neutral "squeezed" atoms fusing together with the shielding of Coulomb repulsion.

References

1. Fleischmann, M. *et al.* 1989. "Electrochemically Induced Nuclear Fusion of Deuterium," *J. Electroanal. Chem.*, **261**, 301.

2. Jones, S.E. *et al.* 1989. "Observation of Cold Nuclear Fusion in Condensed Matter," *Nature*, **338**, 737.

3. Fox, H. 1999. "Ten Years of Low-Energy Nuclear Reactions," *Infinite Energy*, **4**, 24, 16.

4. Srinivasan, M. 1991. "Nuclear Fusion in an Atomic Lattice: Update on the International Status of Cold Fusion Research," *Curr. Sci.*, **60**, 417.

5. Storms, E. 1999. "My Life with Cold Fusion as a Reluctant Mistress," *Infinite Energy*, **4**, 24, 42.

6. Mizuno, T. 1997. *Nuclear Transmutation*, Infinite Energy Press, Concord, N.H.

7. Mengoli, G. *et al.* 1998. "Calorimetry Close to the Boiling Temperature of D_2O/Pd Electrolytic System," *J. Electroanal. Chem.*, **441**, 155.

8. Karabut, A.B. *et al.* 1992. "Nuclear Product Ratio for Glow Discharge in Deuterium," *Phys. Lett.*, **A170**, 265.

9. Fleischmann, M. and Pons, S. 1993. "Calorimetry of the Pd-D_2O System: From Simplicity Via Complication to Simplicity," *Phys. Lett.*, **A176**, 118.

10. Hora, H. *et al.* 1993. "Screening in Cold Fusion derived from D-D Reactions," *Phys. Lett.*, **A175**, 138.

11. Schwinger, J. 1999. "A Progress Report: Energy Transfer in Cold Fusion and Sonoluminescence," *Infinite Energy*, **4**, 24, 81.

12. Sinha, K.P. 1998. "Professor Charles Frank: An Obituary," *Curr. Sci.*, **75**, 66.

13. Frank, F.C. 1947. "Hypothetical Alternative Energy Sources for the Second Meson Events," *Nature*, **160**, 525.

14. Alvarez, L.W. *et al.* 1957. "Catalysis of Nuclear Reactions by Mu Mesons," *Phys. Rev.*, **105**, 1127.

15. Ganguly, B.N., Upadhyaya, U.N., and Sinha, K.P. 1966. "Indirect Interaction Involving Impurity States in Superconductors," *Phys. Rev.*, **146**, 317.

16. Sinha, K.P. 1998. "A Combined Mechanism Mediated by Lochons and Phonons for Cuprate Superconductors," *Mod. Phys. Lett.*, **B12**, 805.

17. Fleischmann, M. 1999. "Nuclear Reactions in the Pd/D System: The Pre-History and History of Our Early Research," *Infinite Energy*, **4**, 24, 25.

18. Sinha, A.P.B. and Sinha, K.P. 1963. "Electronic Motion in Some Polar Semiconductors," *Ind. J. Pure and Appl. Phys.*, **1**, 286.

19. Lang, I.G. and Firsov, Yu.A. 1963. "Kinetic Theory of Semiconductors with Low Mobility," *Sov. Phys. JETP*, **16**, 1301.

20. Alexandrov, A.S. and Mott, N.F. 1995. *Polarons and Bipolarons*, World Scientific, Singapore.

21. Anderson, P.W. 1975. "Model for Electronic Structure of Amorphous Semiconconductors," *Phys. Rev. Lett.*, **34**, 953.

22. Street, R.A. and Mott, N.F. 1975. "States in the Gap in Glassy Semiconductors," *Phys. Rev. Lett.*, **35**, 1293.

23. Blatt, J.M. and Weisskopf, V.F. 1952. *Theoretical Nuclear Physics*, John Wiley & Sons, New York.

24. Satchler, G.R. 1990. *Introduction to Nuclear Reactions*, Oxford University Press, New York.

25. Memory, J.D. 1968. *Quantum Theory of Magnetic Resonance Parameters*, McGraw Hill Book Company, New York.

26. Kaplan, I. 1963. *Nuclear Physics*, Addison-Wesley, London.

27. Reference to relevant papers in *Infinite Energy*, **4**, 24.

About the Author

Dr. Krityunjai Prasad (K.P.) Sinha was born in Akhtiarpore, India. He received an M.Sc. from Allahabad University in 1950, a Ph.D. in Solid-State Physics in 1956 from Poona University, and a Ph.D. in Theoretical Physics in 1959 from Bristol University in the U.K. He began his career as a scientist at the National Chemical Laboratory in Pune, India in 1959. From 1968 to 1970, he was a member of the technical staff at Bell Laboratories in Murray Hill, New Jersey. From 1970 to 1989, he began his stay at the Indian Institute of Science as a Senior Professor in the Physics Department. In 1990, Sinha became a senior scientist with the INSA for four years. From 1991 to 1994, he served as Director of the Institute of Fundamental Research on Complex Systems, located in Shilling, India. Sinha is the recipient of numerous honors and awards. He is author of over 225 papers and books. He established schools of research activity in condensed matter, theoretical studies and complex systems at many institutions in India.

*9805 Juniper Hill Road, Rockville, Maryland, 20850 U.S.A.

E-mail: sinha@sinha.net

New Energy Times Archive

Electronuclear Catalysts and Initiators: The Di-neutron Model for Cold Fusion

Robert R. Schultz* and John P. Kenny**

Two authors with diverse backgrounds—biology, chemistry, computer science, and physics—have collaborated to bring us their "di-neutron" model of cold fusion. Other authors have also discussed "di-neutron"-like models for cold fusion. This one emphasizes the catalytic ability of such di-neutrons to produce the range of cold fusion phenomena. I particularly like their term "electronuclear catalysts," since in previous writing I have referred to low-energy nuclear reactions as "electronuclear reactions." In Infinite Energy No. 28 (p. 63) these same authors presented data that seems to indicate an increasing level of radiation emission from samples taken from a cold fusion cell.—EFM

Proposal

Electronuclear catalysis is a term used to define a class of catalysts that enhance the probability that an electron will react with the nucleus of an atom. These electronuclear catalysts are mainly metals that can work in conjunction with an initiator to increase the rate of K-electron capture in a specific element. The proposed electronuclear catalysts will be the basis for an alternative pathway for the transmutation of deuterium into helium (cold fusion) through an intermediate unstable neutron pair called a di-neutron.

The theory of electronuclear catalysts reduces cold fusion to a reaction analogous to a standard chemical reaction. The difference is that in a chemical reaction, valence electrons from two or more different atoms react to form a molecule. In a catalyzed fusion reaction, an external electron is captured by the single nuclear proton of a deuterium atom to form a neutron pair called a di-neutron. The di-neutron is an uncharged, unstable particle which may decay to reform a deuterium atom (depending on its rest mass and energy) or react with other atoms in its environment. An electronuclear catalyst works by creating a large population of these di-neutrons and packing them very close together. Di-neutrons can be compressed more easily and more densely than deuterium ions since they are uncharged and do not experience electrostatic (Coulomb) repulsion. Fusion commences when the di-neutron population becomes so dense that di-neutrons are captured by other atomic nuclei and begin to decay. With di-neutrons, the decay products of such fusions can be a variegated set of isotopes depending on the available nuclei, along with varying amounts of energy. For cold (or catalytic) fusion, the function of the electronuclear catalyst is to create and compress a population of di-neutrons where they will fuse with some other element or particle that decays into helium-4.

Definitions

Three terms are defined for the purpose of this discussion. An *electronuclear catalyst* is any substance that either:

1) creates an environment which makes electron capture possible, or more likely

2) creates an environment which increases the time an electron resides within a nucleus even if it is not captured.

This paper will concentrate on metals, such as palladium or platinum, that dissolve large amounts of hydrogen.

An *initiator* is an outside force which speeds or promotes electron capture. This paper will concentrate on electron capture initiators for deuterium.

A *di-neutron* is an unstable neutron pair created when an electron is either captured by or resides within the nucleus of a deuterium atom.

Introduction

The huge amounts of energy released when hydrogen fuses into helium is the power that drives our universe. Unfortunately, this reaction takes place in an environment of such great heat and pressure that mankind has been unable to tap hydrogen fusion as a commercial source of energy. For the past decade, a quest has been underway to find pathways where hydrogen fusion can occur in a less energetic environment. This quest goes under the collective title of cold fusion. Its Holy Grail has been to discover a procedure or catalyst which allows hydrogen fusion to occur safely, simply, and at temperatures approximating chemical rather than nuclear reactions. The literature records abundant claims to the observation of cold fusion. Most of these successful cold fusion experiments employ some form of a metallic hydrogenation catalyst such as palladium or platinum. These metals have the ability to dissolve large amounts of hydrogen from the environment into the lattice of their metal atoms. It is thought that at a certain saturation point, the metal lattice is able to compress the hydrogen atoms to the point where they fuse into helium. These experiments have met with some success but no breakthroughs. Even the successes have been very difficult to recreate or independently corroborate. This lack of commercial and reproducible results has led the more orthodox scientific community to dismiss cold fusion research as wasteful and inappropriate. The consensus of cold fusion researchers is that there has to be "something else" or "something new" going on to explain the excess heat and the helium ash. The general scientific community holds to the opposite opinion—that nothing is happening, especially not fusion.

Or is there? The authors would like to propose that there is fusion occurring, but it is not "something else" and it is definitely nothing "new." It is the well-documented and accepted process of K-electron capture. The only "new" idea being proposed is that a K-electron capture process occurring in deuterium can be chemically catalyzed and initiated. *We base this assertion on the fact that hydrogen (and its isotope deuterium) is the only chemically active element that has a valence K-electron.* Therefore, the deuterium electron is both the prime candidate for capture (a nuclear reaction) and an electron that can bind with other elements (a chemical reaction). This paper will use the hydrogen electron as the interface between chemistry and nuclear physics.

The rest of this paper will use this unique property of hydrogen to develop a pathway from deuterium to helium-4. This pathway will contain two parts:

1) An electron capture step where a population of deuterium atoms transmute into a population of di-neutrons.

2) A fusion step where di-neutrons are captured by another nucleus and decay to produce helium-4 and release energy.

Both steps require an electronuclear catalyst for the reactions to take place.

Discussion of "Hot" Fusion vs. "Cold" Fusion and the Art of Judo

The fundamental difference between "hot" and "cold" fusion proponents is the way they propose to overcome the Coulomb barrier. Basically, all "hot" fusion proponents use some variation of a brute force technique. It doesn't matter if it is a Tokomak reactor, a laser implosion, or even a hydrogen bomb, all "hot" fusion methods are basically the same. The "hot" fusion process, at its simplest, requires only hydrogen or deuterium and huge amounts of available energy. The first step in all hot fusion reactions is to apply large amounts of energy to strip the hydrogen atom of its orbital electron. This process creates a naked hydrogen ion which is simply a proton. Then, in the second step, an even greater blast of energy is applied to the hydrogen ion to give it enough kinetic energy to crash through the Coulomb barrier of another hydrogen

New Energy Times Archive

ion. The fusion that takes place creates a single helium ion from the two naked protons. Eventually the helium ion cools and captures two free electrons to form a stable helium atom. Again, every hot fusion process that has ever been tried over the last fifty years is nothing more than a very inefficient application of brute force.

"Cold" fusion proponents approach the problem of the Coulomb barrier in the same way a judo expert attempts to defeat an enemy. Judo is a martial art which teaches its students to use their opponent's own strength against himself, thereby gaining the victory. "Cold" fusion proponents try to neutralize the Coulomb barrier rather than overwhelm it, thereby reducing dramatically the amount of energy required to fuse the hydrogen nuclei. This act of nuclear judo is accomplished by *working with the orbital electrons* rather than by stripping them off and throwing them away. The orbital electrons are used to facilitate the "cold" fusion process using a process called electron capture. The essence of electron capture is that a proton can capture an electron and change into a neutron (and release a neutrino). When this occurs, the Coulomb barrier disappears and, in the case of deuterium, the di-neutrons can approach each other or another nuclei without any electrostatic repulsion. The final step is to have the new nucleus undergo neutron-beta decay, in close enough proximity to another nucleus that the recoil from the beta decay process causes the two nuclei to fuse. In the case of cold fusion, a di-neutron decays close enough to a deuterium nucleus that helium-4 is created.

The consensus of cold fusion researchers is that there has to be "something else" or "something new" going on to explain the excess heat and the helium ash. The general scientific community holds to the opposite opinion—that nothing is happening, especially not fusion. Or is there?

Properties of an Electron

A brief discussion of an electron's properties is appropriate before a discussion of electron capture as it applies to electronuclear catalysts. This paper will begin with a short, four point summary of the properties of an electron. A more complete summary can be read in any first year general chemistry textbook.

The first point is that an electron is a particle that has mass, spin angular momentum, a negative electrical charge, a magnetic moment, and a wavelength. This means it has properties of both particles and waves. The second point is that, for the purposes of this paper, a free electron moves through a vacuum in a straight line. (Note: This simplified view of an electron will not include the Zitterbewegung movement of the electron.) The third point is that the de Broglie Wave Equation modifies the straight line by adding a wave form to the movement of the electron. The wavelength of the electron depends on the amount of kinetic energy it contains. The more kinetic energy (the faster the electron moves), the shorter its wavelength. The fourth point is that the Heisenberg uncertainty principle further modifies the position of the electron by saying that at any finite time, the exact location of the electron can not be known. More importantly, it states that as an electron experiences a change in energy, for a finite amount of time, it can be found outside of its normal path. This uncertainty principle further states that the effect is magnified by increasing the change in energy or decreasing the amount of time over which the energy change occurs. These four points impart a specific geometry to the electron. If viewed in two dimensions, the electron looks like a small particle traveling along a sine wave in a straight line. As this particle moves along the sine wave, it experiences changes to its direction and frequency whenever its energy is modified.

Discussion of the K-Electron Orbital

In nature, negatively charged electrons are usually found orbiting a positively charged atomic nucleus. Quantum mechanics describe these orbitals as stable standing waves around a central point. The study of wave and quantum mechanics is a science unto itself, and even a modest discussion is beyond the scope of this paper. However, one fact of great importance is the predicted geometry of an electron when it resides in the lowest energy orbital, or K-shell, of an atom. *In the K-orbital, an electron has no angular momentum.* Thus, it does not actually orbit the nucleus, rather it vibrates in and out through the nucleus. This property makes the K-orbital different from all other atomic orbital. The K-orbital electron has a small but finite period of time where it resides within the radius of the atomic nucleus. At this time, the electron can react with a proton to form a neutron (*i.e.* electron capture along with the breakdown of the Coulomb barrier). This paper will concern itself with the unique possibilities that exist when electron capture, or something close to it, occurs in deuterium.

Discussion of a Simplified View of the K-Electron Orbital

It will be easier to visualize the geometry of the K-electron if we look at the surface of the deuterium nucleus from the viewpoint of the electron. This view will be built by extending the surface of the nucleus into an infinite plane and removing the electrostatic forces exerted by the protons and electrons. In this view, the orbital over which the electron moves can be viewed as a straight line running parallel to the nuclear plane. This view allows us to treat an electron moving along an orbital the same way as one moving freely in a vacuum except that it would always stay a fixed average distance from the surface of the nucleus. This simplified view allows us to look at an electron moving along the K-orbital from two different perspectives. This electron would have all the properties of a wave, plus it would be the closest electron to the surface of the nucleus. If we viewed the movement of the electron as a simple wave, the perigee of the wave would reside for a small but finite time beneath the surface of the nuclear plane. If we added the uncertainty principle, we would view the position of the electron as a probability cloud. This view would state that there is a finite probability that the electron would reside inside the nucleus at any given time. Both views clearly point out that the K-electron is continually interacting with the nucleus of the atom and can be captured.

K-Electron Capture

K-electron capture is a well-known physical phenomenon. It occurs when an atom captures one electron nearest its nucleus to form an atom of the element just below it in atomic number. The resulting atom still has the same atomic weight as its predecessor, but the resulting atom has one more neutron and one less proton. An example of this phenomena is potassium-40 capturing one of its K-electrons and decaying into argon-40. This reaction is the basis for the potassium-argon dating technique used by geologists. It is also a well-accepted transmutation reaction where one element is changed into another element by virtue of an orbiting electron.

Di-Neutrons

What would happen if K-electron capture occurred in deuterium? The deuterium atom would transmute into a new element that has one less proton and one more neutron. The new element would be composed of two fused neutrons inside a single nucleus. This paper will refer to this neutron pair as a di-neutron and we can predict several of its chemical and physical properties. They are:

1) A di-neutron would have approximately the same atomic weight as a deuterium atom.

2) A di-neutron would have zero electrical charge since it is composed of two neutrons.

3) A di-neutron would have no orbital electrons. Therefore, a di-

New Energy Times Archive

neutron would have no "chemistry" in the classic sense. A di-neutron could not bind with any other substance to form a molecule.

4) A di-neutron would be unstable, just like a free neutron. Free neutrons have a half-life of about ten minutes, at which time they undergo neutron-beta decay to revert back to a hydrogen atom. A di-neutron could also undergo the same neutron-beta decay process. However, the energy of the neutrino would have to be added before the di-neutron could reform the deuterium atom.

5) The products from di-neutron decay would depend on whether one di-neutron decayed by itself or if it lived long enough to be captured by another nucleus.

This instability of the di-neutron opens up a transmutation/fusion pathway between deuterium and the various isotopes of helium. The di-neutron can be looked at as the high-energy, unstable intermediary substance in a standard thermodynamic reaction. Although both the deuterium molecule and the helium-4 atom are stable, the helium-4 atom has a higher nuclear binding energy.

Cold Fusion from Di-Neutrons

This paper proposes that di-neutrons can be created from deuterium via K-electron capture and that helium-4 could be a stable product of di-neutron decay. This cold fusion model is based on creating an environment where deuterium atoms can undergo K-electron capture to form a population of unstable di-neutrons. These di-neutrons would rapidly decay to either reform deuterium or, at times, fuse via a series of reactions to form helium-4. Helium-4 would be created if two di-neutrons underwent neutron-beta decay at the same time while they were close enough to fuse. At this point the helium-4 atom would not undergo any more transmutations and eventually leave the system. However, a percentage of the di-neutrons could decay back into deuterium. These deuterium atoms would again be free to capture electrons and recreate more di-neutrons, which then could start the process over. If the K-electron capture is sustained long enough, eventually all of the di-neutrons would decay into helium-4. The net effect would be that deuterium is transmuted into helium and energy is released.

Electron manipulation is the key to this cold fusion process. This process does ***not*** *require proton manipulation. It is the electron model of cold fusion that allows catalysts and initiators to play a significant role in the reactions.*

Electronuclear Catalysts

What is an electronuclear catalyst and how does it work? An electronuclear catalyst can function in five ways. It can:

1) Disassociate molecular deuterium into deuterium atoms rather than deuterium ions.

2) Increase the number of electrons available for capture.

3) Decrease the distance between the orbital electron and the deuterium nucleus.

4) Increase the time the electron is found within the deuterium nucleus.

5) Decrease the energy an electron requires to interact with the nucleus of a deuterium atom.

The K-electron capture model will use palladium as the metal of choice since it dissolves the most hydrogen. Electronuclear catalysts will function in much the same way as electrochemical catalysts. With all catalysts, a chemical or element reduces the energy required for a reaction to take place, thus speeding up the reaction, but does not get used up in the reaction. The catalyst is either unaffected or regenerated at the end of the reaction and is ready to work again. The difference is that an electrochemical catalyst works only with the valence electrons of its target. Electronuclear catalysts, on the other hand, increase the possibility that an electron will interact with the nucleus of an atom. Platinum and palladium are well-known electrochemical catalysts. This electron capture model proposes that these metals can also function as electronuclear catalysts.

A fully saturated metal catalyst serves three functions:

1) The atoms of the metal catalysts disassociate the deuterium molecules into free deuterium atoms so that electron capture can occur. Free deuterium atoms are almost never found in nature since, at normal temperatures, the deuterium is almost always joined to another atom through a covalent or ionic bond. *The angular momentum possessed by electrons in a covalent bond prevents electron capture.* In an ionic bond, the deuterium completely loses its electron to another atom. It is only inside the metallic electronuclear catalyst that free deuterium atoms can be found.

2) The lattice of the metal catalyst concentrates the deuterium atoms in an environment where electron capture can be induced and a population of di-neutrons created.

3) The metal catalyst increases the number of electrons available for K-electron capture. The orbital electron of the deuterium atom and valence electrons of the catalyst join to form hydrogen bonds. In a fully saturated metal catalyst, all the valence electrons of the catalyst and the deuterium atoms become equivalent and contain the same energy. This means that all valence electrons, no matter their origin, can be captured by the deuterium nucleus to form a di-neutron particle.

In summary, the electronuclear catalyst's major function is to facilitate electron capture, or something close to it, in deuterium. The electronuclear catalyst is the substrate on which di-neutrons are created.

K-Electron Capture Initiators

This paper proposes that electron capture can be initiated in deuterium. An electron capture initiator could work by increasing the chance that an electron would react with a deuterium nucleus. One method would be by increasing the energy of an orbiting K-electron. If the deuterium atom was surrounded by a sphere of catalyst electrons, the K-electron would be held closer than normal to the deuterium nucleus. The extra energy would translate into an electron with a shorter wavelength. The shorter the wavelength, the greater the number of times the electron would reside inside the nucleus over a specific time period. It is important to remember that the K-electron does not orbit the nucleus as other electrons, rather it vibrates through the central nucleus. Initiators that increase the energy of the K-electron, increase this vibration. The result is an increase in the time the electron resides inside the nucleus and an increase in the energy the electron has to react with the nucleus. Both factors make electron capture more likely. The authors propose that microwaves that interacted with the K-electrons, or just simply heating the catalyst, would work as electron capture initiators.

A second class of electron capture initiators could use the "delta t" in the Heisenberg uncertainty principle as their basis. These initiators would change the energy of all orbiting electrons, not just the K-electrons. This energy change would make the position of the electron unpredictable. It means that for the small amount of time during which the energy change is taking place, there is a small but finite probability that any electron would reside inside the nucleus of the deuterium atom. It should also be noted that the energy change could be positive or negative. The electron could gain or release energy and still find itself inside the nucleus. The Heisenberg uncertainty principle makes all electrons available for capture. The authors propose that heat or an electrical current would work as this type of initiator.

The Process of Di-neutron Decay Cold Fusion

The following summary reiterates the steps leading to di-neutron decay cold fusion:

1) Deuterium is concentrated into a metal electronuclear catalyst.

2) The electronuclear catalyst creates a population of deuterium atoms and a cloud of equivalent electrons that are available for capture.

3) Di-neutrons are created as K-electron capture commences in the deuterium atoms. The electron capture process could use initiators to increase the chance an electron will reside inside the nucleus of the deuterium atom.

New Energy Times Archive

4) Di-neutrons fuse with other available nuclei and decay to helium-4.

5) The helium-4 and heat leave the system as end products.

Does the Electron *Have* to be Captured?

Is it necessary for a stable deuterium atom to completely capture an electron before it can become an unstable di-neutron? The answer is most likely "no." A true di-neutron would contain two equivalent neutrons, each of which is equally subject to neutron-beta decay. However, a di-neutron exists whenever a deuterium atom has an orbital electron residing within its nucleus, even if it is not completely captured (*i.e.*, the electron and proton combine to form a neutron and emit a neutrino). The Coulomb barrier is still neutralized whenever the K-electron resides within the nucleus. The presence of the extra electron inside or even near the deuterium nucleus would be enough to neutralize the electrostatic (Coulomb) barrier. For a deuterium atom, its Coulomb barrier would "flicker" each time its K-electron first approached, entered, and then left the nucleus. A high-energy, unstable di-neutron would exist for as long as the electron resided in the nucleus. Most likely, complete electron capture would not occur. Instead, the electron would continually enter and leave the nucleus of the deuterium atom and form a di-neutron. At those times the di-neutron would be available to fuse with another atom.

No Detectable Neutrons

This electron capture/di-neutron decay model for cold fusion answers one of the most perplexing questions of the whole cold fusion debate: *Where are the neutrons*? Hot fusion physicists claim that hydrogen fusion creates free neutrons. They insist—*no neutrons, no fusion*. But cold fusion research has time and again reported excess heat, helium ash, and *no neutrons*. The best way to reconcile the theoretical argument of the hot fusion camp with the observed results of the cold fusion amp is to develop a cold fusion model based on the consumption of neutrons rather than their creation. This is exactly what the di-neutron decay model for cold fusion provides. Neutrons are consumed as the di-neutrons are subject to neutron-beta decay. Helium-4 is formed from the simultaneous decay of two di-neutrons. Di-neutron decay does not create the high energy, detectable, free neutrons that hot fusion physicists expect. Neutrons, in fact, are created by this electron capture/di-neutron decay model. But they are created inside the nucleus of the deuterium atom and are not detectable by normal means. Hot fusion physicists look for fast moving neutron bullets as evidence for fusion. Therefore, they design their neutron detectors for nuclear reactions that create high kinetic energy, fast moving, free neutrons. Their equipment would never detect the low energy neutrons created during electron capture, so they refuse to believe fusion is actually taking place. Instead of neutrons, physicists should look for the lower energy beta radiation as evidence for the occurrence of fusion.

The Di-neutron Pump

The di-neutron model also answers another perplexing observation of cold fusion research. It has been reported that the cathode in an active cold fusion cell will contain elements that did not exist at the beginning of the experiment. Researchers have reported traces of chromium, copper, silver, and zinc in active cathodes where none existed before. The question is, where do these elements come from? How are they created? This model answers by pointing out that any nucleus can capture a di-neutron. It then becomes a matter of nuclear stability which determines if:

1) Both neutrons stay within the nucleus, thus creating a heavier isotope of the same element.

2) A single neutron undergoes neutron-beta decay to create the next element higher in the periodic table.

3) Both neutrons undergo neutron-beta decay to create the element two places higher in the periodic table.

We have coined the term "Di-neutron Pump" to describe this process. Di-neutrons are captured by an atomic nucleus and, through neutron-beta decay, transmute the atom into a higher element. This can occur multiple times to the same atom. It can be "pumped" to a higher element each time it absorbs a di-neutron. This process can explain why unexpected elements are found in the cathode after a successful cold fusion run.

Conclusion

This paper builds a cold fusion model centered around di-neutron formation from deuterium via the phenomena of K-electron capture. This step is followed by the di-neutron's capture by and subsequent decay within another nucleus. It employs an electronuclear catalyst that makes electron capture in deuterium possible. It employs initiators to speed di-neutron formation and decay. But most important, it creates a means by which the Coulomb barrier around the deuterium atom can be neutralized. This opens up a pathway for the creation of helium-4 from deuterium that does *not* require high energy neutrons or the fusion of two free ions. In doing so, this model reduces hydrogen fusion from a high energy nuclear, to a low energy, almost chemical reaction. The end result is the same: hydrogen (deuterium) is transmuted into helium-4 and energy is released.

Note: The authors also think that the "Di-neutron Pump" is the basis for the successful reduction of radioactivity in some elements reported by a number of cold fusion groups. It can be easily found that the half-life of a radioactive element decreases as the number of neutrons in its nucleus increases. For example: The half-life of plutonium-239 is 24,100 years. The half-life of plutonium-241 is 14.4 years. Therefore, if the plutonium-239 atoms in our radioactive wastes could be changed into plutonium-241 by the absorption of di-neutrons, the radioactivity of that waste would drop dramatically over a much shorter period of time. This process holds great promise for our environment.

About the Authors

Robert R. Schultz received a B.S. in Biology from the University of Illinois in 1973. Later he enrolled at Bradley University to earn a degree in Chemistry. While working on the chemistry degree, it became apparent that computer analysts were more in demand than chemists. So he changed his major and received a M.S. in Computer Science from Bradley University in 1986. He has worked at Caterpillar Inc. for over twenty-two years, most recently as an application specialist in Caterpillar's IS department. However the phenomena of electron capture has been a continual fascination of his. This fascination eventually led to John P. Kenny, Ph.D. at Bradley University, where they have collaborated in developing a cold fusion model based on electronuclear catalysis and electron capture.
*schultz-rr-ms@worldnet.att.net

John P. Kenny has been a Professor of Physics at Bradley University since 1968. He teaches undergraduate physics and astronomy to liberal arts and engineering students. His research emphasis has been on Quantum Cellular Automata and Mass Theories relying on Electropionic Interactions. He is currently researching the zero-spin D-meson and the Di-neutron Pump. During his long and varied career, John has worked on projects ranging from the Gemini Space Project's Rendezvous Radar to windmill and heat pump applications for the Irish climate. John is an avid soccer and "Star Trek" fan, as well as the father of five children and currently grandfather of six.
**http://www.bradley.edu/las/phy/kenny.html

New Energy Times Archive

U.K. Energy News

Soo Seddon

Fuel Cell Update

The Second Annual Industry Event, Automotive Fuel Cells 2000 Conference, is scheduled to be held in February in London. A follow-on from the one we covered last year (I.E. No. 25, p. 37), the agenda includes several presentations on Fuel Infrastructure "examining latest developments in the storage, handling, and metering of hydrogen and methanol fuels." To be followed by a Fuel Choice Debate, "comparing wheel-to-wheel efficiency and infrastructure cost implications of proposed fuels."

It seems that the methanol vs. hydrogen saga is still far from settled, although the latest data from manufacturers would appear to indicate that the majority of cell-builders are focussing their R&D efforts around one or the other already.

The Conference agenda also includes the usual promotional presentations from vehicle manufacturers along with, seemingly obligatory, lengthy lectures from marketing strategists, EU representatives, and technicolor characters from various U.S. research institutions.

A general interest news sheet listed some fuel cell industry developments to date:

•The DBB (Ballard affiliate company) fuel cell powered bus, now 2,000 kg lighter than the earlier prototype, was being geared up for commercial production in two years time.

•Honda had placed a $4 million Canadian order with Ballard to supply them with fuel cells for R&D purposes.

•The DOE has given a $150,000 grant to the Transportation Department of New Jersey for the development of a hydrogen fuel cell car. The resulting vehicle is scheduled to compete in the Tour de Sol next year.

Generally, work on fuel storage systems appears to be the real growth industry. Several companies are concentrating on eliminating the need for on-board reformers by investigating the possibilities of solid hydrogen storage, while others have chosen to travel down the "build a better pressure cylinder" path.

I suspect materials scientists can virtually write their own pay checks for advising on new composites to contain hydrogen effectively and overcome the diffusion and embrittlement problems.

I booked myself in for the Conference, so watch this space.

Y2K - At Last?

Assuming our publishing office computer managed to void the demon bug, the cover date on this issue should read January/February 2000, which is obviously too late to feature a Millennium Media Watch update. However, as I'm actually writing this in November 1999, I fear there's one last batch of UK Y2K hype for readers to endure.

The hot millennium news in the UK, at the time of writing, is that the "London Eye" observation wheel has—at last—been hoisted into place on the bank of the Thames. A few months ago, it lay unceremoniously on its side, half in and half out of the river, following an engineering glitch when a cable socket slipped. It's now vertical—all 450 feet of it—and even has a goodly proportion of its thirty-two observation capsules fixed into place.

The 1,500 ton structure, which will be open to the public in January 2000, will be operated along ski-lift lines with passengers entering and leaving while the wheel remains very slowly rotating. Riders on the "London Eye," which dwarfs almost every building in central London, including the tower of Big Ben, will be able to see for twenty-five miles around on a clear day. The thirty-minute ride will cost the equivalent of $10.

The new feature is expected to be one of the capital's major tourist attractions for the next five years. A tech. spec. and some amazing views from the web cam are to be found on www.british-airways.com/londoneye.

***

How did you chill your champagne on millennium eve?

A London-based company is marketing 1,000 year old ice cubes extracted from deep below Greenland's ice cap.

The purity of the frozen chunks is said to be guaranteed, as their formation predates global pollution and some of the older layers of the ice cap have been dated to as far back as 60,000 years.

***

Having taken slightly less time to create is the £758 million Millennium Dome in Greenwich. Tickets are now on sale but, apparently, not selling too well in Scotland and the North of England where few feel inclined to take a long (and undoubtedly delayed) train journey to visit a damp tent on the riverbank.

***

And, finally. . .it's official! The new year is to be known as "oh-oh." A national newspaper survey revealed that "two thousand" was considered too much of a mouthful and "double zero" was a non-starter. . .much, I fear, like the Millennium Dome.

EXOTIC RESEARCH REPORT

21st Century • Energy Technology
Alternative Medicine • Latest Inventions

U.S. $30 • Can/Mex. $35
Foreign: $55

Exotic Research • P.O. Box 411 • Stanfield, AZ 85272
1-800-417-6399

Why not give INFINITE ENERGY as a Gift Subscription? Call 603-228-4516.

Electrifying Times
Latest Electric Car News

Only $12.00* per year for 3 issues.

The only periodical in America with newsstand distribution covering the fast growing world of EV's and HEV's.

63600 Deschutes Market Road
Bend, Oregon 97701
Phone: (541) 388–1908
Fax: (541) 388–2750
Website: www.electrifyingtimes.com
E-mail: etimes@teleport.com

*$18.00/yr Canada; $21.00/yr International

New Energy Times Archive

Historical Opinions on Controversial Science

The following excerpts from the New York Times *and* World Progress *show the problems, skepticism, and encouragement associated with the first days of Marconi's historic experiment.*

Researched by Barbara DelloRusso

World Progress January 31, 1932

. . .On that bleak day in 1901 Guglielmo Marconi and two assistants, G.S. Kemp and P.W. Paget, with the aid of a Newfoundland fisherman, were trying to keep a kite in the air in a wild December storm on Signal Hill, Newfoundland. Their purpose in keeping it aloft was that it might catch the wireless signals that were being sent out from Poldhu, in Cornwall, England.

They had been working for six days on Signal Hill, laying out the grounds, transporting gas cylinders, balloons, kites, receiving apparatus and sheets of zinc for the earth plates, and preparing and attempting to fly the balloons and kites.

On the fourth day they were successful in flying the first kite with 600 feet of aerial wire, but the signals sent out from Poldhu could not be identified. On the fifth day, when the weather was somewhat calmer, one of the balloons was sent up, but a squall blew up and carried it away.

On the morning of the sixth day, December 12, another kite was sent up, but within an hour it, too, had been blown away and disappeared in the mists. Another kite was gotten ready and successfully flown for three hours. During this period Signor Marconi was successful in receiving perfect signals on a telephone receiver. He had achieved that which many of the world's prominent mathematicians had assured him was impossible, the Atlantic had been bridged by electric waves transmitted through space. . .

In previous experiments in England in 1899, Marconi had noticed that at moderate distances the curvature of the earth did not appear to impede wireless signals. Mathematicians held the opposite view. It was therefore a rather bold experiment that Marconi undertook and it involved the expenditure of approximately $250,000 as well. . .

> The men of science point out the obstacles. They have commonly been deemed insuperable. The first triumph is an augury of future conquests.

In relating his experiences Marconi said that the reception given his work by American scientists was very encouraging. There was not so much enthusiasm in Europe, but Edison, Bell, Pupin and Thompson, all sent him telegrams of congratulation. . .

Thirty years from the time that Marconi heard those faint clicks radio remains the only power controlled by man that can be transmitted over great distances without an artificial conductor. No light, however strong, can be seen, no sound, however loud, can be heard across the ocean. One might explode all the ammunition in Great Britain at once and it would not be heard in America. The fact that those faint clicks were something from beyond the boundaries of human experience up to that time is impressed upon one when one remembers that the only other energies which have reactions at very great distances are such things as earthquakes, and the light and heat of the sun and stars, which are not man controlled. In the opinion of Marconi there is no limitation to the conquest of space. The possibilities of the future are infinite. After thirty years the world is just arriving at television and Marconi has hinted that maybe someday some one will succeed even in transmitting energy.

New York Times December 15, 1901

Wireless Signals Across the Ocean

St. John's N.F.—Guglielmo Marconi announced tonight the most wonderful scientific development of recent times. He stated that he had received electric signals across the Atlantic Ocean from his station in Cornwall, England.

Talk with Marconi's Lawyer

Edward H. Moeran said: "Marconi is one of the finest fellows that ever breathed, but I fear that he is talking too soon. If he has succeeded in getting signals from England, and I am inclined to believe that he has, it marks a new era in the history of the world. "We have not tried to advertise our company," he said, "and we are not in the habit of telling anything, unless we know it to be absolutely true."

Signor Marconi's Career: Early Discouragements Followed by Success

Guglielmo Marconi was born near Bologna, Italy, on April 25, 1874, and so is not yet twenty-eight years old. . . His experiments in his native country came to but little so far as attracting popular attention or even that of scientists. It was not until he went to England, in 1896, that he secured scientific and financial backing.

When first reaching England, however, Signor Marconi received a setback. His instruments were mistaken by the Custom House authorities for bombs and infernal machines, and were accordingly broken up. This was discouraging, but Marconi, who had successfully used them the year before in telegraphing a distance of two miles on his father's estate, had unbounded confidence in his system. He had another set of instruments made, and conducted his first experiments in London. . .

Nikola Tesla's Researches

Nikola Tesla, in discussing his theories and discoveries some years ago, hinted at the possibility of telegraphing through the air and earth." He said:

New Energy Times Archive

". . .My experiments have been almost entirely confined to alternating currents of high potential. An alternating current is a current changed periodically in direction and the word potential expresses the force and energy with which these currents are made to pass. In this particular case the force is very great. The fact that a current vibrates back and forth rapidly in this way tends to set up or create waves in the ether, which is a hypothetical thing that was invented to explain the phenomena of light.

"One result of my investigation, the possibility of which has been proved by experiment, is the transmission of energy through the air. I advanced that idea some time ago, and I am happy to say it is now receiving some attention from scientific men.

"The plan I have suggested is to disturb by powerful machinery the electricity of the earth, thus setting it in vibration. Proper appliances will be constructed to take up the energy transmitted by these vibrations, transforming them into a suitable form of power to be made available for the practical wants of life.

"The outlook for wireless telegraphy is problematical. But one thing is certain, we shall be able to send very important short messages from centre to centre."*

*[*See "The Life and Times of Nikola Tesla" by Marc Seifer (1996 Birch Lane Press), for more on the eventual court ruling in Tesla's favor.]*

T.C. Martin's Views

T.C. Martin, editor of *The Electrical World*, when seen last night, called attention to an editorial which he had written for the Nov. 30 issue of the paper, and in which he expressed the belief that Marconi's experiments would prove successful. Mr. Martin said further:

"I believed that Marconi would be successful, but did not anticipate it so soon. In a book which I published some eight years ago on Tesla's work is embodied one of his lectures, in which he gives wireless telegraphy considerable attention. He expressed his belief in the matter so clearly that he made up my mind for me. I am only sorry, therefore, that Mr. Tesla, who has given the matter so much thought and experimentation, and to whose initiative so much of the work is due, should not also have been able to accomplish this wonderful feat. I have talked with Prof. Fessenden, who is now engaged on the subject for the United States Government, and with Dr. Kennelly, at one time expert for Mr. Edison, and they agreed as to the feasibility and near possibility of the achievement.

"Although Mr. Marconi is to be heartily congratulated on his magnificent results, the idea is not to be jumped at that cables are any less useful then heretofore. So far as is known, there is no means of preventing successfully the interference of wireless signals, and until they become automatically selective it would seem that only one station on each side of the Atlantic, or even on each side of New York Bay, would engage in the business. . . Even should this difficulty be overcome, as it doubtless will be, I find it hard to believe that it will be so entirely removed as to involve the complete supercession of cables."

New York Times December 17, 1901

May Sue Signor Marconi

Anglo-American Telegraph Company Serves Papers on Him

It Says He is Violating Its Monopoly of the Telegraph Business of Newfoundland

St. John's N.F., Dec. 16—On returning here from Cape Spear today Signor Marconi was served with legal documents from the solicitors of the Anglo-American Telegraph Company. These notify him that the company possesses a monopoly of the telegraph business within Newfoundland and its dependencies, and demand that he cease his experiments and remove his apparatus forthwith, else the company will apply to the Supreme Court for an injunction restraining him from further trials.

> In the opinion of Marconi there is no limitation to the conquest of space. The possibilities of the future are infinite. After thirty years the world is just arriving at television and Marconi has hinted that maybe some day some one will succeed even in transmitting energy.

Signor Marconi has not yet decided as to what course he will take in this matter. He regards the action of the Anglo-American Telegraph Company as the best proof of the importance of his new successful experiments.

When Signor Marconi was at Cape Spear, the newspaper report that Mr. Edison discredited the announcement of signals having been received here last week from Cornwall was telephoned to him. He replied that the signals were received by himself, and that they were absolutely genuine.

Editorial

The Epoch-Making Marconi

If Marconi succeeds in his experiments with intercontinental wireless telegraphy his name will stand through the ages among the very first of the world's great inventors. The thing he is attempting to do would be almost transforming in its effect upon the social life, the business and political relations of the peoples of the earth. The animating spirit of modern invention is to overcome the obstacles of time and space, "to associate all the races of mankind" by bringing them nearer together. . . It would be better for the world if communication between the countries that ocean divides could be much increased in volume through a saving of cost and time.

The initial success of Marconi appeals powerfully to the imagination. It will be the fervent hope of all intelligent men that wireless ocean telegraphy will very soon prove to be not a mere "scientific toy," but a system for daily and common use. The men of science point out the obstacles. They have commonly been deemed insuperable. The first triumph is an augury of future conquests.

Prof. Pupin Praises Marconi's Great Feat

". . .Marconi deserves great credit for pushing this great work so persistently and intelligently, and it is only to be regretted that there are so many so-called scientists and electricians who are trying to get around Marconi's patent and thus deprive him and his people of the credit and benefits of the work to which they are fully entitled.

"There are quite a number of people who claim to have devised other systems of wireless telegraphy, where in reality they are nothing more than the Marconi system, with modifications or something added for the sole purpose of evading the various claims of the Marconi system by mere technicalities. The entire credit is due to Marconi, and it should be granted him fully, as his feat of signaling between two continents 1,800 miles apart on Saturday was a long step toward ultimate success."

New York Times December 18, 1901

The Action Against Marconi

St. John's, N.F. Dec. 17.

New Energy Times Archive

The local press criticizes the action of the Anglo-American Telegraph Company, and expresses its regret at such proceedings, which, it says, are likely to jeapardize the chance of the colony to secure a wireless telegraph station. The public is indignant over the company's attempt to stop Marconi's experiments. The view taken is that the company, seeing that only two years of its monopoly remains, should not prevent the colony from enjoying the benefits of the new invention, especially as it may take that period of time to perfect the Marconi system.

The Anglo-American Company's position is said to be that it is taking action to protect its legal rights. It offered no objection while the Marconi experiments applied merely to reducing the number of wrecks, saving life at sea, or assisting in navigation by making ocean signaling possible. But when the experiments assumed the form of competitive commercial enterprise the company was justified in protecting itself.

Editorial
To Restrain Marconi

The action of the Anglo-American Telegraph Directors in serving on Signor Marconi papers in a suit for trespass upon the soil of Newfoundland, in which they claim an exclusive monopoly of all telegraphic rights, is an act of folly of which a well-managed corporation should be incapable in this age of general business intelligence. With the legal aspects of their action we have no occasion to concern ourselves. They may have the rights claimed, and the courts may sustain their contention, although that is scarcely probable. Assuming, however that their monopoly of Newfoundland for telegraphic purposes is so absolute that one could not there *[sic]* experiment with flashlights or heliograph signals, which would be fairly comparable to what Marconi is doing, the unwisdom of their action is seeking to restrain him is so evident that it almost passes comprehension.

If Marconi has found a way of transmitting electrical impulses through the air across the ocean, and can develop his system to a point at which it becomes competitive with the cables, the persons owning and operating the Anglo-American cable should make haste to put themselves in a position to take advantage of it on the "most favored nation" basis. To this end they would have shown wisdom in offering Marconi the free use of their line for any messages he might want to send and every facility for the most exhaustive experimentation. . . Meanwhile, they should have put themselves in a position to take advantage, for the benefit of their customers, of all that Marconi might accomplish to facilitate and cheapen ocean telegraphy. This would have shown ordinary business sagacity and given notice to those ambitious of developing competition with the cables in international communication that whatever is useful in Marconi's invention will be of more value to companies with large investments to protect than to any one else.

What the Anglo-American Company has actually done is to give notice to the world that it sees in Marconi a dangerous competitor: that it is afraid of his invention, and that the syndicate of capitalists which secures control of it will have a means of compelling the existing cable companies to come to terms. This would be an extremely dangerous admission, if true. In making it the Anglo-American Company has done Marconi all the good possible and itself all the harm it was at the moment in its power to inflict. This illustrates exactly the difference which exists between narrow selfishness and enlightened self-interest. The incident is instructive, if not edifying.

❐❐❐

Limited Edition CD!
Antigravity • Cold Fusion • Ball Lightning

- Theory
- Stories, reports
- Pictures taken at LANL, NASA, Puthoff's Institute, Wright Patterson, and ENECO
- Movies of Stenger's ball lightning experiments, lobby at PowerGen, lectures, Cutlass Submarine, plasma ball in a microwave chamber, cryogenic zero point energy experiments/index

Runs on any computer with a browser

$19.95 No. America • $23.95 Foreign
Order from: Cold Fusion Technology, Inc.
P.O. Box 2816 • Concord, NH 03302-2816
Phone: 603-228-4516 • Fax: 603-2284-5975
http://www.infinite-energy.com

THE HOMOPOLAR HANDBOOK:
A Definitive Guide to Faraday Disk and N-Machine Technologies
by Thomas Valone
$23.95 No. America
$28.95 Foreign
Paperback, 188 Pages

ORDER FROM:
Cold Fusion Technology, Inc.
P.O. Box 2816, Concord, NH 03302-2816
Phone: 603-228-4516
Fax: 603-224-5975

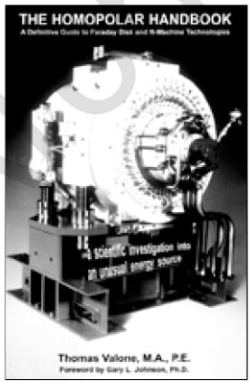

PERPETUAL MOTION:
An Ancient Mystery Solved?

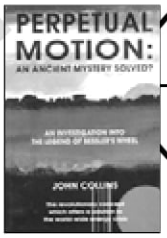

$25.00 No. Amer.
$32.00 Foreign
Paperback

"The book deserves to be on many a history of science shelf, not only for the mechanical puzzle it poses but also for the timeless human story it tells... "
Dr. Thomas Phipps, Jr.

Cold Fusion Technology, Inc.
P.O. Box 2816, Concord, NH 03302-2816
ph: 603-228-4516; fax: 603-224-5975

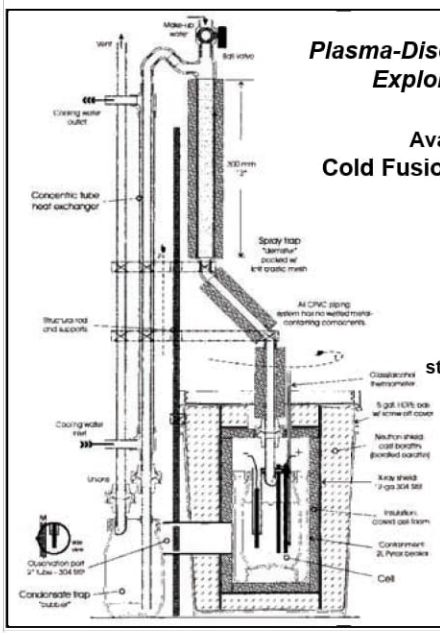

Plasma-Discharge Electrolysis Exploration System

Available from:
Cold Fusion Technology, Inc.

P.O. Box 2816
Concord, NH
03302-2816
Ph: 603-228-4516
Fax: 603-224-5975

E-mail:
staff@infinite-energy.com

Contact us for further information.

$595.00
plus shipping

New Energy Times Archive

Update on Boeing Test of Robert Cook's CIP Engine

Editor's Note: Infinite Energy *hopes to have more technical discussion of the results from the Boeing tests. At the moment our graphs and other material for Cook and associates are being analyzed. (See additional coverage in IE 28, p. 61.) The following report was filed by Robert Cook.*

On November 29, 1999 a two-rotor CIP reactionless drive unit proved itself by accelerating a series of five-pound weights from zero to over one-thousand feet per minute in a fraction of a second and then decelerating them without producing the ninety to one-hundred pound negative reaction force required by Newton's Third Law of action-reaction. As a result of this action, a second reactionless force or impulse of lesser intensity was produced in the one to five pound second range. This impulse can be used to propel objects in any medium such as space or in the earth's atmosphere under gravity. By adding more rotors and timing them at the proper intervals, a constant force can be achieved which can propel anything from cars to spacecraft.

Newton's Blunder

What Cook's machine accomplished on November 29 and 30, 1999 at Boeing Field in Seattle, was proving beyond any doubt that:

1) There are ways of generating internal, unidirectional, reactionless forces capable of achieving more than "bounded motion." This discovery will now allow man to think about the impossible, *i.e.* spacecraft capable of achieving speeds near or perhaps beyond the speed of light!

2) Newton as well as the scientists who came after him "screwed up" when they insisted that only reaction, external type forces could be used to propel objects such as cars, boats, planes, etc.

3) The so-called institutions of higher learning are not instilling "common sense" in the scientists and engineers they are educating. It is this problem that has denied Cook the engineering support he needed in the past to get this very complicated work successfully proven many years ago.

To: Robert Cook, CIP Systems, California
Subject: Inertial Propulsion Tests
Date: December 17, 1999
Attachments: Test Data

Bob,

Thanks for bringing your CIP hardware to Boeing for testing. Your hardware was more capable on this trip and we were able to get some reasonable data that was not clipped. Attached are the data plots and my test notes from the test runs that we conducted. Some of the tests were not plotted due to the data being clipped or otherwise corrupt. All data was taken at 10,000 Hz, with a 0.4 filter factor on the output. Thus, the effective data resolution is 4,000 Hz (true waveform). In accordance with the agreement signed by Jerry Jaeb you are free to use this data as you see fit.

After discussing this data with other engineers here at Phantom Works, we would be very interested in testing the machine again after you install the second rotor to reduce the noise and increase the thrust.

Yours truly,

Jamie Childress, Principal Investigator
Boeing Phantom Works

Boeing's Outstanding Engineer

James "Jamie" Childress must be recognized for the courage and super common sense he has shown in his attempt to prove Cook's propulsion principle. In spite of much peer pressure to ignore the CIP engine principle, he went forward and set up the necessary equipment to properly test Cook's two-rotor model. Childress hopes that Cook's invention can eventually be perfected to the point where a small unit can be rigged to generate about fifty pounds of thrust (force) to maneuver Boeing's space shuttles in space. These latest tests conducted by Childress show that there is a very good possibility that a precision-made unit incorporating twelve to sixteen rotors can achieve this goal. The two-rotor unit tested was very slow and is not very smooth, but it must be remembered that this model was put together in Cook's garage and has many imperfect, handmade parts. It's almost a miracle that it runs as well as it does.

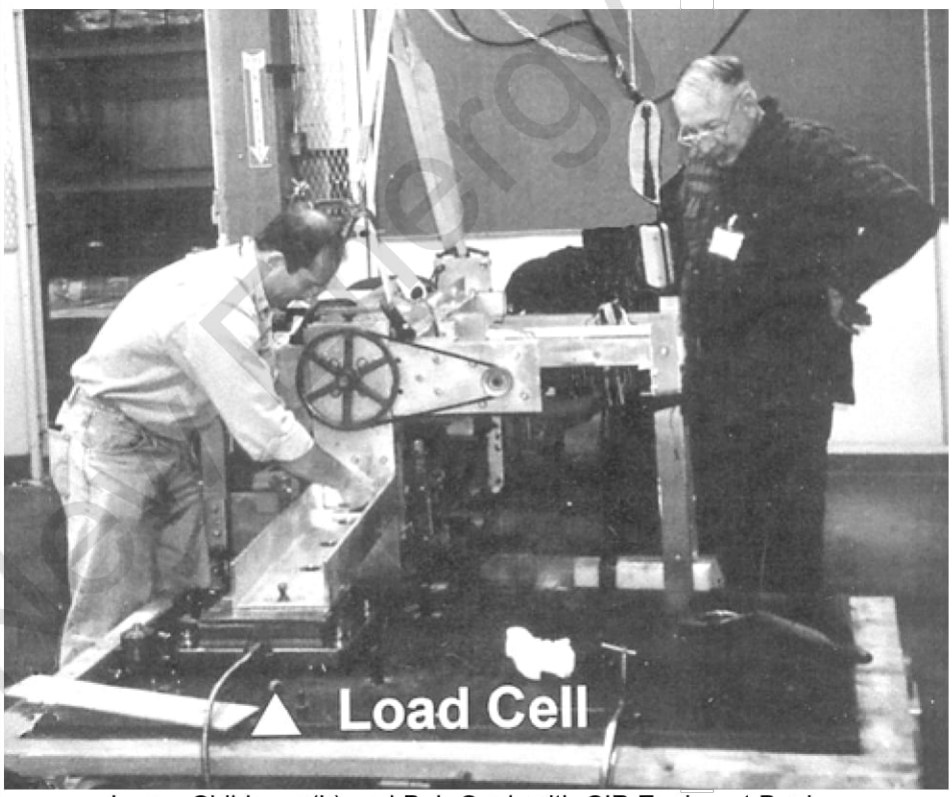

James Childress (L) and Bob Cook with CIP Engine at Boeing.

Photos: Courtesy Bob Cook

Comical Events

On December 1, 1999, after two days of testing the model and trying to find Newton's "lost" reaction force (that should have registered in the one hundred pound range every time the five pound weight was picked up or ejected) one of Boeing's dynamicists approached Cook and informed him that because Newton's Third Law of motion required an opposite and equal reaction to be created every time the weight was exchanged onto or off of the rotor (which at times was spinning at over 360 revolutions per minute) the unit could not work! But what he apparently didn't know was the fact that

New Energy Times Archive

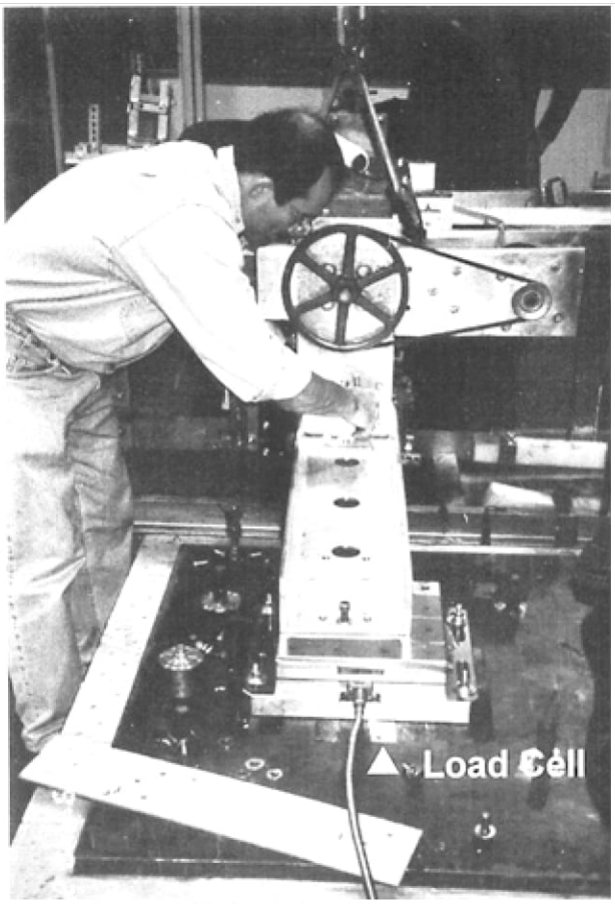

James Childress, Boeing Engineer, adjusts CIP Engine Test Rig

for two days, Jamie Childress had been searching for Newton's "lost" reaction force.

The "load cell" attached to the working model had failed to register the one hundred pound recoil demanded by the Third law of motion for every exchange of the five pound weights. On that day, December 1, 1999, Childress had decided to search for another effect of lesser intensity that the unit was supposed to generate as a result of adding the five pound weights. This impulse had been calculated to be in the one to five pound second range. But for some mysterious reason this propulsive force (or impulse) was coming out negative. This led him to believe that the model had failed to prove itself.

Cook went home that day very disappointed after being told that his model was a failure. He was led to believe that, if the load cell test could not confirm the fact that his model worked, then this was the wrong test to give to what he believed was a history making model. Cook was in shocked disappointment for three days. On Saturday, December 4, Cook received a call from Jamie Childress, which left him shocked in a different way. Childress told him that the negative results registered by the load cell on December 1, were really positive instead and this meant that the CIP engine did work after all! It turned out that the load cell had been hooked up backwards! This experience caused Cook to recall the disappointment scientists Pierre and Marie Curie must have felt in 1898 when they thought their radium experiment had failed. A spot left on a dish turned out to be the radium sample they wanted to see after years of hard work in trying to recover it. They could not see the proof of their theory until they went back to the lab at night and discovered the glow of radium at the bottom of the dish. Their work and discovery changed the course of world history just as Cook's discovery is about to do. ❐❐❐

Quotes From 11 Year Olds' Science Exams

"Water is composed of two gins, Oxygin and Hydrogin. Oxygin is pure gin. Hydrogin is gin and water."

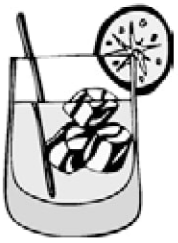

"When you breathe, you inspire. When you do not breathe, you expire."

"H_20 is hot water, and CO_2 is cold water."

"To collect fumes of sulphur, hold down a deacon over a flame in a test tube."

"When you smell an odorless gas, it is probably carbon monoxide."

"Nitrogen is not found in Ireland because it is not found in a free state."

"Three kinds of blood vessels are arteries, vanes, and caterpillars."

"Blood flows down one leg and up the other."

"Respiration is composed of two acts, first inspiration, and then expectoration."

"The moon is a planet just like the earth, only it is even deader."

"Dew is formed on leaves when the sun shines down on them and makes them perspire."

"A super-saturated solution is one that holds more than it can hold."

"Mushrooms always grow in damp places and so they look like umbrellas."

"The body consists of three parts—the brainium, the borax and the abominable cavity. The brainium contains the brain, the borax contains the heart and lungs, and the abominable cavity contains the bowels, of which there are five—A, E, I, O and U."

"Momentum: What you give a person when they are going away."

"Planet: A body of earth surrounded by sky."

"Rhubarb: a kind of celery gone bloodshot."

"Vacuum: A large, empty space where the pope lives."

"Before giving a blood transfusion, find out if the blood is affirmative or negative."

"To remove dust from the eye, pull the eye down over the nose."

"For a nosebleed: put the nose much lower than the body until the heart stops."

"For drowning: climb on top of the person and move up and down to make Artificial Perspiration."

"For Fainting: Rub the person's chest or, if a lady, rub her arm above the hand instead. Or put the head between the knees of the nearest medical doctor."

"For dog bite: put the dog away for several days. If he has not recovered, then kill it."

"For asphyxiation: Apply artificial respiration until the patient is dead."

"To prevent contraception: wear a condominium."

"For head cold: use an agonizer to spray the nose until it drops in your throat."

"To keep milk from turning sour: keep it in the cow."

"The pistol of a flower is its only protection against insects."

"The alimentary canal is located in the northern part of Indiana."

"The skeleton is what is left after the insides have been taken out and the outsides have been taken off. The purpose of the skeleton is something to hitch meat to."

"A permanent set of teeth consists of eight canines, eight cuspids, two molars, and eight cuspidors."

"The tides are a fight between the Earth and Moon. All water tends towards the moon, because there is no water in the moon, and nature abhors a vacuum. I forget where the sun joins in this fight."

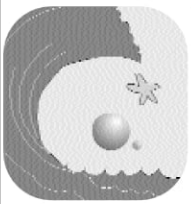

"A fossil is an extinct animal. The older it is, the more extinct it is."

"Equator: A managerie lion running around the Earth through Africa."

"Germinate: To become a naturalized German."

"Litre: A nest of young puppies."

"Magnet: Something you find crawling all over a dead cat."

Anonymous Internet Humor

Nutmeg Times Archive

Briefs continued from page 41

Now, this has been verified by numerous laboratories—federal, Japan, China, Italy and on and on. The Department of Energy has gone on the war path against this; they have attacked it, they have prevented patents. And Stanley Pons, by the way, is no longer a U.S. citizen. He's a citizen of France. That's, in essence, it.

JM: I had an opponent back some years ago who was a strong advocate of cold fusion. I did receive briefings at that time. That was seven or eight years ago. I confess to you, and you wanted a straight answer, I have not kept up with it since then. So, I will agree with you publicly to get a briefing.

GM: Thank you!

JM: Obviously I will be here a lot, so I will take the time. How long will a briefing take?

GM: As much time as you have. . . fifteen minutes to an hour.

JM: An hour. . .Let's compromise. Forty-five minutes, is that alright?

GM: Fine, you're on!

JM: Okay, then I will have my competent staff, most of whom are in work release programs [a joke!], get with you. . .

Editor's Note: John McCain became the very first Presidential candidate in history to publicly agree to a briefing on cold fusion. [Editor Mallove has already privately briefed Libertarian presidential candidate, Harry Browne, whom he met on the lecture circuit.] In the next issue of *IE*, we will report the outcome of how other candidates in the New Hampshire Presidential primary responded to the McCain action and briefing.—*EFM*

Refrigerator continued from page 46

can be a functional definition of proof. A lack of evidence does not constitute irrefutable evidence, as some day someone may have positive, irrefutable evidence. An ingenious PMM2 is examined.[13] It is a membrane which allows more gas passage one way than the other, allowing pressure to build up spontaneously on one side. It is assumed that gas flow will be equal in both directions and gas concentration will be equal on both sides, and are therefore the reasons it does not work. The assumptions are just that, not proper premises. Was this device ever tried? No evidence was given, and I challenge the authors to cite the experimental data. By their demonstrated attitude, I'll bet it was assumed to be nonworkable.

Maxwell's Demon is an emotional issue for scientists: intense curiosity for those who want to learn, and intense hatred and frustration for those who have learned the conventional wisdom and want the idea to die. It is the concept put forth by James Clerk Maxwell of an intelligent being that might be able to sort fast moving particles from slow ones and create heat flowing "uphill" in temperature spontaneously, in violation of the Second Law, similar to the membrane PMM2, above. The Goldsteins spend a lot of time in the book on this intriguing subject. The Goldsteins state that Maxwell's Demon, ". . .threatens the Second Law. Can anything save it?" Said humorously or not, the undertone of the discussion is a bias toward the Second Law. We want our theories more than we want the truth. Science should be neutral. The facts are the facts, and we should rejoice in the truth, not the favored position in a debate. Does the story of Maxwell's Demon contain truth or not? Our involvement as scientists should stop there.

In support of the lone researcher, who "marches to the beat of a different drummer," I wish to remind us of those scientists of the past who mirror today's researchers at the frontiers of physics. The authors speak of Julius Robert Mayer, a German physician, and James Joule, who both championed the kinetic theory of heat at a time when it was unaccepted in the scientific community. Both had a definite uphill struggle for acceptance. William Thomson (Lord Kelvin) and others opposed Joule's concepts for a long time. Mayer went unacknowledged for a long time until recognized by Rudolph Clausius and Herman von Helmholtz.[14] Jean Perrin believed in molecules at a time when it was not accepted. Perrin developed elaborate experiments to justify the hypothesis by demonstrating Brownian motion.[15] When the prevailing attitude in mainstream science is against you, take heart by examining history. Critics of modern research (such as mainstream science) do not understand the history of science. The overall tone of *The Refrigerator and the Universe* is decidedly aligned with conventional, mainstream science. Free thinkers beware.

There are a number of false statements, other than minor typographical errors. While discussing the ability of electromagnetic waves to exert pressure on matter, the example is given of the tail of a comet which faces away from the sun.[16] It is primarily corpuscular radiation from the sun, the solar wind of protons and electrons, which pushes debris from a comet away from the sun. The authors speak about Gibbs free energy. Two equations are used which are wrong: $W_{max} = T\Delta S_{max}$, and $\Delta G = -T\Delta S_{max}$.[17] The correct relations are $-W_{max} = \Delta G = \Delta H - T\Delta S$, where W is work, G is Gibbs free energy, H is enthalpy, T is absolute temperature, and S is entropy.[18] Referring to the function of our bodies' kidneys, it is stated that the largest possible entropies for urea and salts would occur when the concentrations of each in both blood and urine are equal.[19] This is wrong. Equilibrium occurs when the sum of the chemical potentials of each substance in the blood and the urine are minimum, and chemical potentials are a measure of spontaneity like Gibbs free energy. Concentrations can be very unequal; this is how osmosis works.

Despite my severe disagreements as a researcher in frontier science, I give this book a "thumbs up" rating with a smile. Not everyone needs to critically question the bases of science, and this book is a great resource for them. Even for those who do, it is a good summary of the status quo.

References

1. Goldstein, M. and Goldstein, I. 1993. *The Refrigerator and the Universe*, Harvard University Press, Cambridge, MA, p. 150.
2. *Ibid.*, p. 6.
3. *Ibid.*, p. 106.
4. *Ibid.*, p. 149.
5. Steinmetz, C.P. 1999. "The Second Law of Thermodynamics and the Death of Energy," *Infinite Energy*, **5**, 26, p. 20.
6. *Ibid.*, p. 20.
7. Goldstein, *Refrigerator*, p. 351.
8. *Ibid.*, p. 150.
9. *Ibid.*, p. 136.
10. Rauen, K. 1999. "Carnot Is Not Universally True, An Argument That Higher Engine Efficiency Is Possible," *Infinite Energy*, **5**, 29, p. 47
11. Goldstein, *Refrigerator*, p. 324.
12. *Ibid.*, p. 122 and 129.
13. *Ibid.*, pp. 146-147.
14. *Ibid.*, pp. 51-64.
15. *Ibid.*, p. 180.
16. *Ibid.*, pp. 250-251.
17. *Ibid.*, pp. 284-285.
18. Masterton, W. and Slowinski, E. 1973. *Chemical Principles*, W.B. Saunders Co., Philadelphia, Third Edition, pp. 325-327, 334.
19. Goldstein, *Refrigerator*, p. 286.

New Books Available from Infinite Energy (See p. 3 for more information):

Earth Under Fire: Humanity's Survival of the Apocalypse; Subquantum Kinetics: The Alchemy of Creation, both by Paul LaViolette.
Dark Matter, Missing Planets, and New Comets: Paradoxes Resolved, Origins Illuminated by Tom Van Flandern

New Energy Times Archive

Innovator's continued from page 45

Once a company sells to the high-end market, it cannot easily back down and introduce cheaper, mass-market models. High-end products for rich customers usually generate a fat profit margin. Companies accustomed to 40% gross margins for 8-inch drives could not bring themselves to accept 25% gross margins from cheaper, slower, low capacity 5.25-inch drives.[11] They did not want to cannibalize their own high-end business. On the other hand, companies making the smaller drives were anxious to break into the high-end, high-profit business, so they rapidly improved the small drives.

Large companies are already in business and committed to supporting their customers. Disruptive innovations have no market at first. As Christensen says, "In the tug-of-war for development resources, projects targeted at the explicit needs of current customers or at the needs of existing users that a supplier has not yet been able to reach will *always* win over proposals to develop products for markets that do not exist."

A large company may not consider a new, small market worth selling to. It might consider a million-dollar order too small to bother with. The size of the organization should fit the size of the market. Large companies have sometimes succeeded in small markets by establishing spin-offs, or autonomous divisions to handle the new product. A famous example is the IBM division in Florida which developed the Personal Computer (PC) in 1980. The chairman of IBM badly wanted the PC. He fought bureaucratic opposition and institutional inertia for many years to get one. He finally financed the project with discretionary funds and ordered the project manager to report directly to him.[12,13] This led to one of the most spectacular successes in the history of business. The IBM PC was developed in record time, sales soared, and in a few years IBM took over most of the market. The story has a sad ending. In 1984, PC sales became important to IBM's profits, so managers at corporate headquarters took back control of the business. They stifled innovation, reduced IBM's market share to less than 5%, and since 1984 they have continually lost money, while Compaq, Dell, Hewlett Packard, and others in the same business have made billions.

Christensen's "disruptive/sustaining" hypothesis is powerful, and worth studying. His examples are illuminating, memorable, and often amusing. But the hypothesis does not explain every case in which great firms have failed. In 1984 when IBM inexplicably began to lose money in PC sales, the PC was no longer disruptive technology; it was the standard. The opportunity to introduce hybrid gasoline electric automobiles has been on the table for nine decades. This would be sustaining technology with broad customer appeal, distinct advantages, a somewhat higher cost, and therefore better profit margins. (The automakers would earn more, the oil companies less.) Yet the automakers have ignored this opportunity.

References

1. Table from Christensen, C. 1997. *The Innovator's Dilemma*, Harvard Business School Press, p. 15.

2. In 1979 I managed a Data General computer with a 12 megabyte hard disk. It was the size of a large refrigerator. A repairman showed up one morning to install skids, to prevent the equipment cabinet from tipping over when the disk drive rack was rolled out for maintenance. The disk drive was so heavy that a similar model had toppled over and crushed a technician to death. Today, a 50 gigabyte hard disk weighs about a kilogram.

3. Christensen, *Innovator's*, p. 73.

4. *Ibid.*, p. 192.

5. The Fast Search utility (www.alltheweb.com) returned 2176 relevant documents in 0.8520 seconds, including many that a product manager would want, such as the Electric Vehicle Association of the Americas (www.evaa.org), and the *EV World* online magazine (www.evworld.com).

6. Moore, W. "Behind The Scenes of Prius Launch—Part 2, An Interview with Mark Amstock, Toyota Advanced Technology Product Launch Manager," *EV World*, www.evworld.com.

7. Thomas, J. 1999. "Growing a Hybrid, Gas-electric Car by Honda on Way to U.S. Dealers," *Atlanta Journal*, October 8. This is a two-seat compact car, rated 60 mpg in the city, 70 mpg highway.

8. Wouk, V. 1997. "Hybrid Electric Vehicles," *Scientific American*, October, p. 70.

9. See, for example, EPRI manager T. Schneider's forward to N. Hoffman, 1993. *A Dialog on Chemically-Induced Nuclear Effects*, American Nuclear Society.

10. Christensen, *Innovator's*, p. 126.

11. *Ibid.*, p. 81.

12. Carroll, P. 1993. *Big Blues: The Unmaking of IBM*, Crown Publishers, p. 2.

13. Christensen, *Innovator's*, p. 110.

❑❑❑

Internet Humor

The heaviest element known to science was recently discovered by investigators at a major U.S. research university. The element, tentatively named administratium, has no protons or electrons and thus has an atomic number of zero. However, it does have one neutron, 125 assistant neutrons, 75 vice neutrons, and 111 assistance vice neutrons, which gives it an atomic mass of 312.

These 312 particles are held together by a force that involves the continuous exchange of meson-like particles called morons. It is also surrounded by vast quantities of lepton-like particles called peons.

Since it has no electrons, administratium is inert. However, it can be detected chemically as it impedes every reaction it comes in contact with. According to the discoverers, a minute amount of administratium causes one reaction to take over four days to complete when it would normally have occurred in less than a second. Administratium has a normal half-life of approximately three years, at which time it does not decay, but instead undergoes a reorganization in which a portion to the assistant neutrons, vice neutrons, and assistant vice neutrons exchange places. In fact, an administratium sample's mass actually increases over time, since with each reorganization some of the morons inevitably become neutrons, forming new isotopes.

This characteristic of moron promotion leads some scientists to speculate that perhaps administratium is spontaneously formed whenever morons reach a certain quantity in concentration. This hypothetical quantity is referred to as "critical morass."

Institute for New Energy

is an international organization to promote new and renewable energy sources. Its monthly newsletter is

New Energy News,

reporting worldwide on all facets of new and enhanced energy. Memberships in INE are $35 per year for individuals, $60 for corporations & libraries, and includes 12 issues of *NEN*

Journal of New Energy,

a Quarterly Scientific Journal
Hal Fox, Editor
Subscriptions are $150 for 4 issues.

Fusion Information Center

3084 East 3300 South
Salt Lake City, UT 84109

Also available: *Cold Fusion Impact in the Enhanced Energy Age*, a book about the near future of the world energy situation.

Phone for information: 801-466-8680

http://www.padrak.com/ine/

New Energy Times Archive

Moon References from page 17

Moon, P. and Spencer, D.E. 1955. "A Postulational Approach to Electromagnetism," *J. Franklin Inst.*, **259**, 293-305.

Moon, P. and Spencer, D.E. 1955. "On Electromagnetic Induction," *J. Franklin Inst.*, **260**, 213-226.

Moon, P. and Spencer, D.E. 1955. "On the Ampere Force," *J. Franklin Inst.*, **260**, 295-311.

Moon, P. and Spencer, D.E. 1955. "Some Electromagnetic Paradoxes," *J. Franklin Inst.*, **260**, 373-395.

Moon, P. and Spencer, D.E. 1956. "On the Establishment of a Universal Time," *Philosophy of Science*, **23**, 216-229.

Moon, P. and Spencer, D.E. 1958. "The Cosmological Principle and the Cosmological Constant," *J. Franklin Inst.*, **266**, 47-58.

Moon, P. and Spencer, D.E. 1958. "Retardation in Cosmology," *Philosophy of Science*, **25**, 287-292.

Moon, P. and Spencer, D.E. 1958. "Mach's Principle," *Philosophy of Science*, **26**, 125-134.

Moon, P. and Spencer, D.E. 1958. "The New Electrodynamics and Its Bearing on Relativity," *Kritik und Fortbildung der Relativitatstheorie*.

Spencer, D.E. *et al*. 1988. "The Theory of Retarded Potentials," *Hadronic Journal*, **11**, 5, 231-241.

Moon, P., Spencer, D.E., and Moon, E.E. 1989. "Universal Time and the Velocity of Light," *Physics Essays*, **2**, 368-374.

Moon, P., Spencer, D.E., and Moon, E.E. 1989. "Binary Stars from Three Viewpoints," *Physics Essays*, **3**, 275-287.

Spencer, D.E. *et al*. 1989. "The Force Between Moving Charges and the Edwards Effect," *The Thorny Way of Truth*, IV Est-Ovest, Graz, Austria, 200-204.

Moon, P., Spencer, D.E., and Moon, E.E. 1990. "The Michelson-Gale Experiment and Its Effect on the Postulates on the Velocity of Light," *Physics Essays*, **3**, 421-428.

Spencer, D.E. *et al*. 1990. "Three Formulations of Electrodynamics," *The Thorny Way of Truth*, VIII, Graz, Austria, 101.

Moon, P., Spencer, D.E. *et al*. 1991. "The Sagnac Effect and the Velocity of Light," *Physics Essays*, **4**, 249-252.

Moon, P., Spencer, D.E. *et al*. 1991. "The Validity of Gaussian Electrodynamics," *The Mathematical Heritage of C.F. Gauss*, ed. George Rassias, World Scientific Pub. Co., 517-525.

Spencer, D.E. and Shama, U.Y. 1991. "Gauss and the Electrodynamic Force," *The Mathematical Heritage of C.F. Gauss*, ed. George Rassias, World Scientific Pub. Co., 685-711.

Spencer, D.E. and Shama, U.Y. 1993. "Transformation Equations in Accelerated Coordinate Systems," *Physics Essays*, **6**, 368.

Spencer, D.E. and Shama, U.Y. 1994. "The History of the Mathematical Representation of Electromagnetic Theory," In*Eves' Circles*, The Mathematical Association of America Notes, 34.

Moon, P., Spencer, D.E. *et al*. 1994. "The Electrodynamics of Gauss, Neumann, and Hertz," *Physics Essays*, **7**, 223.

Moon, P., Spencer, D.E. *et al*. 1994. "The Force Between Current Elements," *Physics Essays*, **7**, 223.

Spencer, D.E. 1995. "Review of Oliver Darrigal's *The Electrodynamics of Moving Bodies from Faraday to Hertz*," *Mathematical Reviews*, September, 95i:78001.

Spencer, D.E and Shama, U.Y. 1996. "Stellar Aberration and the Postulates on the Velocity of Light," *Physics Essays*, **9**, 476.

Moon, P., Spencer, D.E. *et al*. 1997. "The Universal Time Postulate on the Velocity of Light," *Problems of Space, Time, Gravitation Fourth International Conference*, September 16-21, 1996, St. Petersburg, Russia, 57-69.

Moon, P., Spencer, D.E. *et al*. 1997. "A Gaussian Equation for the Force Between Moving Charges," *Problems of Space, Time, Gravitation Fourth International Conference*, September 16-21, 1996, St. Petersburg, Russia, 188-195.

Spencer, D.E. *et al*. 1997. "The Gaussian Form of the Maxwell Equations," *Problems of Space, Time, Gravitation Fourth International Conference*, September 16-21, 1996, St. Petersburg, Russia, 271-279.

Spencer, D.E. *et al*. 1997. "The Experimental Verification of the New Gaussian Equation for the Force Between Moving Charges: The Hering Furnace," *Problems of Space, Time, Gravitation Fourth International Conference*, September 16-21, 1996, St. Petersburg, Russia, 280-292.

Spencer, D.E. *et al*. 1997. "The Experimental Verification of the New Gaussian Equation for the Force Between Moving Charges: Overhead Welding," *Problems of Space, Time, Gravitation Fourth International Conference*, September 16-21, 1996, St. Petersburg, Russia, 43-52.

Spencer, D.E. and Shama, U.Y. 1998. "The Keystone of Electrodynamics," *AAAS*, February 14.

Spencer, D.E. *et al*. 1998. "Weber's Equation and the Scalar Potential," To be published.

❑❑❑

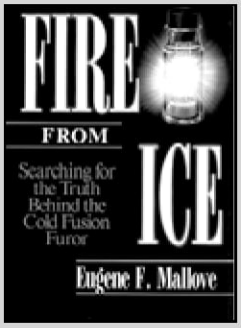

FIRE FROM ICE:
Searching for the Truth Behind the Cold Fusion Furor

Eugene F. Mallove, Sc.D.

Infinite Energy Press Reprint of 1991 Edition, Softbound
$25.95 No. America
$29.95 Foreign
(Includes Shipping/Airmail)

Cold Fusion Technology, Inc.
e-mail: staff@infinite-energy.com
web: http://www.infinite-energy.com
Phone: 603-228-4516 Fax: 603-224-5975

In God we trust . . . All others bring data.

Submitted by Scott Little

1999 Conference on Future Energy (COFE) Products

Proceedings (Paperback) **$40.00**
Proceedings (CD) **$49.00**
All plenary, workshop, and contributed papers. Fifteen audio tracks. Video clip of Intora Noncombustive Helicopter and clips from "Cold Fusion: Fire from Water." DOE-EIA twenty-year Energy Forecast and Radwaste study.

Video Tapes of Speakers **$20.00 Each**
Speakers include: Ken Shoulders, Paul Brown, Kent Robertson, David Wallman, Paul Pantone, Peter Graneau, Thomas Valone, David Hamilton, Bruce Perreault, Steven Greer, Les Adam, Ed Storms, David Goodwin, Tom Van Flandern

Audio Tapes of Speakers **$5.00 Each**
Speakers listed above

Audio Tapes of Workshops **$5.00 Each**
Workshops include: Ken Shoulders, Gene Mallove, Jack Bitterly, George Miley and Bob Bass, Paul Brown, Bob Rose and Les Adam, David Wallman, Peter Graneau, Frank Znidarsic and Paul LaViolette, Paul Pantone, Ed Storms, Steven Greer

To Order: Cold Fusion Technology,
P.O. Box 2816, Concord, NH 03302-2816
Phone: 603-228-4516 Fax: 603-224-5975

New Energy Times Archive

Subscribe to *Explore! for the Professional* to acquire the latest research of

T.E. Bearden
P. Tewari
Robert Beck
G. Belovari

and other cutting edge researchers interested in Alternative Energy and Energy Medicine.

Contact us at:

Explore Publications, Inc.
Post Office Box 1508
Mt. Vernon, WA 98273

sample issue $7.50 (US)

back issues ARE available

credit card orders accepted at 1-800-845-7866 or

visit our website at:
www.explorepub.com

"LIBERTARIANS HAVE ALL THE good ideas."
—HUGH DOWNS, ABC NEWS

★★★★★★★★★★★★★

"THE PARTY TO WATCH IN THE 21ST CENTURY."
—DAVID BRODER, WASHINGTON POST

★★★★★★★★★★★★★

"THE MOST IMPORTANT MESSAGE OF OUR AGE."
—COLUMNIST JAMES GLASSMAN

★★★★★★★★★★★★★

"The cutting-edge politics of the time."
—THE VILLAGE VOICE

★★★★★★★★★★★★★

For a free Libertarian Party information package, call toll-free or visit our web site...

800-ELECT-US
www.LP.org

Back Issues of *Infinite Energy* Magazine Always Available Contact 603-228-4516 for Complete Listing

Volume 5—1999-2000

Issue No. 25 (88 pages) • Why Does Lightning Explode and Generate MHD Power (Peter Graneau) • Beamed Black Hole Radiation: Cosmology and Ball Lightning Connected • •The Pseudoscientists of APS • Experimental Study on Cold Fusion from Colombia• Excitation and Extraction of Vacuum Energy via EM-Torsion Field Coupling • The Source of Excess Energy from Water, Russia • Physical Laws of the Emerging New Energies, continued • Exploitation of Gravity Field Energy • Transistors and Cold Fusion: Part I

Issue No. 26 (72 pages) • James "Scotty" Doohan Interview • Conference on Future Energy • Unity Solid State Heat Engines • APS Features Cold Fusion Session • The Second Law of Thermodynamics and the Death of Energy • Deuteron Dimerization Inside Metal Crystals • Inside Zero Point Energy • The Perennial Challenge of Anomalies at the Frontiers of Science • Transistors and Cold Fusion: Part II • *Scientific American*, Fuel Cells, and Cold Fusion

Issue No. 27 (88 pages) • Do We Live in a Cold Fusion Universe? • Note and Update on "Thermo" Nuclear Fusion (Renzo Boscoli) • Three Decades of Cold Fusion Prior to Pons and Fleischmann • Is the Occurrence of Cold Nuclear Reactions Widespread Throughout Nature? • Producing Power by Burning Nuclear Waste • Deuterium Based Radiationless Cold Fusion • Nuclear Processes in Palladium Deuteride • A Review on Biquaternion Quantum Mechanics (E. Conte)

Issue No. 28 (72 pages) • The Tragedies of Renzo Boscoli and "Warm Fusion" • The Sun is Not a Hot Fusion Reactor (Harold Aspden) • A Visit to Hokkaido University • INE Symposium '99 • Mallove-Park Non-Debate • Review of Cold Fusion Theory • Alternative Catalysts for Cold Fusion • Vortex Filaments, Torsion Fields, and the Zero-Point Energy • New Segment: A Piece of History - Historical Opinions of Controversial Science • Book Reviews: *Forbidden Archaeology; The Whispering Pond, Is Anyone Out There?* • Robert Cook's CP Engine Test Impresses Engineers at Boeing

Scientists must continually be motivated by the "mother" of all questions: what facets of nature remain undiscovered because what we consider to be theoretical certainties prevent the posing of new challenging questions?

—Dr. Beverly Rubik

New Energy Times Archive

FREE Gift if you visit OURPAL website
http://www.ourpal.com

OUR PAL(R) ASIJA
MBA, PE, CDP, JD, ATM
AFFORDABLE
Intellectual Property
Attorney

PH:203-924-9538, FAX:203-924-9956
E-Mail: Ourpal@ourpal.com
Jail-Mail: 203-924-4271
(AKA Voice-Mail)
Snail-Mail: 7 Woonsocket Avenue
Shelton, CT 06484
Free Inventrepreneurship Kit

Electrolysis Systems Power Control

Providing Consultation on Circuit Design and Operation; Programming to Your Specifications; Circuit and Software Prototyping. Marathon Systems is developer of the Mk12.30 Advanced Power Controller. Provides confidential consultation on operational requirements. Capabilities to design and test prototype circuits. Software programming.

Marathon Systems Enterprises, Inc.
P.O. Box 7743
Gaithersburg, MD 20898

Web Parlour Design

"Helping to weave you a presence on the Web."

Web page design and site management services provided for individuals and small businesses.

Email: info@webparlour.com
Web: www.webparlour.com
Tel. (603) 783-0034

TO SUBSCRIBE OR RENEW *INFINITE ENERGY* MAGAZINE COMPLETE INFORMATION BELOW.

Name:_____
Address:_____
Address:_____
City:_____State:_____ Postal Code/Zip:_____
Country:_____ Phone:_____ Fax:_____

If using Credit Card: Check one: Master Card ____ VISA____American Express____
Card Number: _____Expiration Date: _____
Signature_____ E-Mail address_____

Infinite Energy Magazine (ISSN 1081-6372)

Subscriptions are $29.95 North America/$49.95 Foreign for six issues per year.
Any six single back issues $29.95/$49.95. Single Issues $5.95/$10.00.
Special Double Issues $10.00/$15.00. Price includes First Class/Airmail shipping.

QUANTITY	ITEM #	PRODUCT	PRICE NORTH AMERICA	PRICE FOREIGN
		NEW Subscription — Start at Issue No.		
		RENEW Subscription — Start at Issue No.		
		Single Back Issue(s) No.		
		Double Back Issue(s) No.		
		TOTAL		

Call *Infinite Energy* Magazine and ask for our catalog of books and tapes.

Cold Fusion Technology, Inc. P.O. Box 2816, Concord, NH 03302-2816
Phone: 603-228-4516; Fax: 603-224-5975
Visit our website: http:// www.infinite-energy.com

Now in its fifth year, *Infinite Energy Magazine* has been expanding distribution on U.S. newsstands. Typical 1999/2000 press run: 5,000 - 10,000 copies/issue. It is an international technical magazine with outreach to the general public as well. To maintain the highest editorial standards, it is written and edited by scientists, engineers, and expert journalists. It is aimed at pioneering scientists, engineers, industrialists, and investors who are entering an exciting R&D area. *Infinite Energy* now has subscribers in thirty-eight countries!

This area continues to grow explosively, with significant involvement by corporations and institutions in the U.S., Japan, France, Italy, India, Russia, and China. New technology developments and scientific discoveries are being made monthly. ***Infinite Energy*** reports on the latest information that is now pouring in from research centers around the globe.

New Energy Times Archive